

Textbook of
ILIZAROV SURGICAL TECHNIQUES
Bone Correction & Lengthening

Vladimir Golyakhovsky
Victor H Frankel

JAYPEE

Contents

Part One: INTRODUCTORY CHAPTERS

1. Biomechanics of the Ilizarov External Fixator 3
2. Ilizarov Frame Assemblage 7
3. Biomechanics of the Ilizarov Method 9
4. Biomechanic Considerations for the Fracture Treatment 13
5. Basics of the Method of Distraction Osteogenesis 15
6. Basics of the Method of Compression Osteogenesis 17
7. Criteria of Bone Healing and Fixator Removal 19

Part Two: ASSEMBLY OF THE CIRCULAR FIXATOR

8. Rings and Arches 23
   - Half-Ring 25
   - Five-Eighths Ring 34
   - Half-Ring With Curved Ends 36
   - Arches 37
9. Ring Connections 39
   - Bolts and Nuts 39
   - Rods and Plates 49
   - Threaded Sockets and Bushings 58
   - Supports and Posts, and Half-Hinges 60
   - Wire-Fixation Bolts 64
   - Wire-Fixation Buckles 66
   - Washers 68
   - Wrenches 69
10. Frame Assemblage 71
    - General Considerations 71
    - Ring Positioning 73
    - Ring Level 74
    - Ring Inclination 76
    - Space Between Skin and Ring 80

Technical Hint: Two-Fingers Breadth Rule 81
Ring Positioning at Osteotomy/Corticotomy, Nonunion and/or Fracture Sites 82
Ring Orientation 83

11. Wires: Types and Utilization 85
General Considerations 85
Technique of K-Wire Introduction 89
Wire Positioning on the Same Ring 97
Offset Wire Positioning 100
Proper Distance of Wires From Joints, and Direction of Introduction 101
Wires With Stoppers 103
Wire Tensioning 104
Affixing Wire to Ring 109
Technical Hint: Wire Tensioning 111
Reducing (Correcting) Wire 112
Wire Retensioning Technique 114
Wire Cutting and Bending 114
Guidewire 115
Pulling or Traction Wire 117
Bone Fixation With Half-Pins 118

Part Three: CLINICAL TECHNIQUES

12. Ilizarov Corticotomy (Compactotomy) Technique 125
Anatomic and Physiologic Considerations 125
Corticotomy Technique 126
Level of Corticotomy 136
Monofocal and Bifocal Corticotomy 137
Radial Bone Cut and Fibula Resection 137
Corticotomy or Osteotomy for Partial Bone Defect Replacement 138
S-Shaped Osteotomy for Purulent Osteomyelitic Cavities 139
Corticotomy for Transverse Shifting and Bone Widening 140

13. Hinges 143
Positioning of Hinges 145
Opening Wedge Hinge 150
Distraction Hinge 151
Compression Hinge 152
Translation Hinge 153
Translation Correction Device 154
Rotation Correction Device 156
Derotation Maneuver 156
Derotation Combined With Lengthening 157
Speed of Correction with Hinges (Rule of Triangles) 158
Two-Axis Hinges 159

14. General Principles of Ilizarov Technique **161**
Technique of Bone Distraction 161
Technique of Bone Compression 165
Correction of Joint Contractures 169
Case Illustrations 173

15. Segmental Bone Transport in Large Bone Loss and in Severe Infection **187**
General Considerations 187
External Bone Transport Technique 187
Internal Bone Transport Technique 188
Combined External-Internal Transport Technique 190
Advantages and Disadvantages of the Techniques 191
Special Considerations in Segmental Bone Transport Techniques 191
Biomechanics of Ilizarov External Fixator Relating to Frame Construction in Large Bone Loss and Distraction and to Anatomic Factors 191
Technique of Segmental Bone Deviation Correction 194
Combined Distraction With Correction of Incongruency and Rotation Deformity 197
Case Illustrations 198

16. Ilizarov Fracture Management; Treatment of Foot and Hand; and Arthrodesis **207**
Indications for Ilizarov Fracture Treatment 210
Ilizarov Technique for Correcting Foot Deformities 218
Ilizarov Technique for Corrective Hand Procedures 225
Ilizarov Technique for Compressive Arthrodesis 227
Ilizarov Technique for Stump Lengthening 229
Case Illustrations 230

17. Fixator Removal and Complications of Ilizarov Technique **233**
Criteria for Fixator Removal 233
Technique of Ilizarov Fixator Removal 235
Complications 236

Part Four: THE NEW DEVELOPMENT OF THE METHOD

18. The New Modifications of the Ilizarov Technique **243**
The Conclusion 251

Selected Bibliography *253*

Index *255*

10 Chapter

Frame Assemblage

GENERAL CONSIDERATIONS

In constructing any type of Ilizarov frame, the major considerations are:

1. The stability of the fixation of the frame to the bone
2. The prevention of gross bone fragment motion
3. The ability to manipulate bone and to perform necessary fragment movements such as straightening, bending, distraction, compression, rotation, and combinations of these movements.

There are two methods of Ilizarov frame construction. The first is to construct the required frame in advance, assembling all the parts, then placing the sterilized frame as a whole over the limb during surgery, and transfixing the rings to the bone with the K-wires (Fig. 10.1).

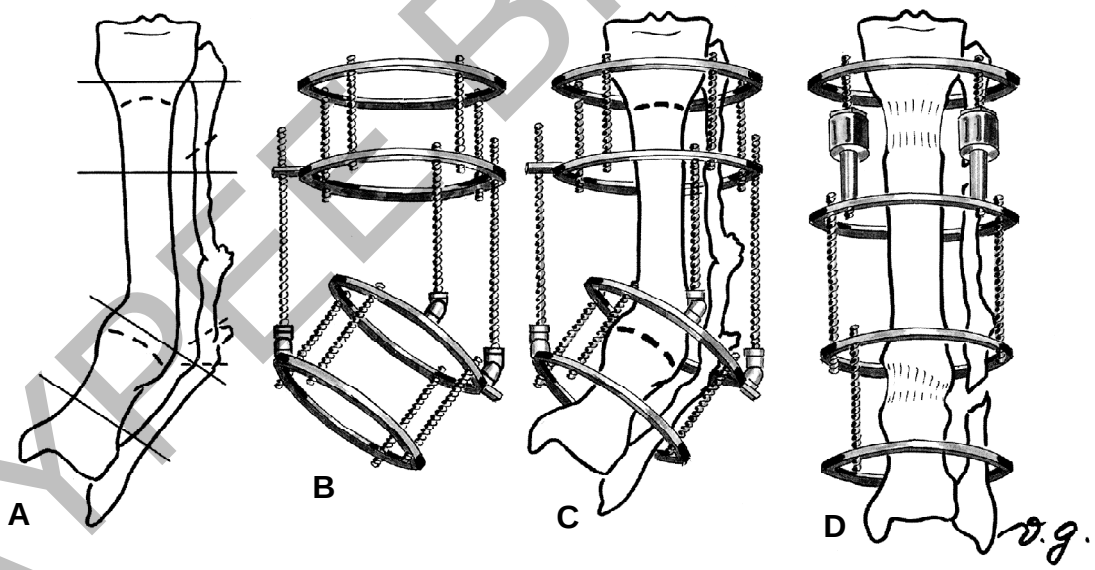

Figure 10.1: Schematic representation of preassembled method of application of the frame. **A,** bony outline of a roentgenogram of tibia-fibula malunion with shortness and severe varus deformity (posteroanterior view). Positioning of the rings is indicated by *uninterrupted lines*, the sites of the bone osteotomies by *interrupted lines*. **B,** preassembled frame according to the marked indications in **A.** Note that the ring angulation is supported by three hinges *(thick lines)*. **C,** preassembled frame in **B** is applied to the limb, matching the marked levels. Note that proximal and distal pairs of rings are positioned perpendicular to the long bone axis. **D,** projected appearance of the bones in **A** and **C** after lengthening at the site of proximal osteotomy, and correction at the site of distal osteotomy. The newly regenerated bone is marked. Note that all four rings now are positioned parallel to each other. (Details of the distraction and correction techniques are described in Chapter 14)

JAYPEE BROTHERS

The second method is to construct the frame during surgery, assembling it piece-by-piece over the limb. To do this the K-wires first have to be introduced into the bone, then the rings and other parts connected to them, until the entire frame is built (Fig. 10.2).

The main advantage of the first method of frame assembly is that it saves time during the surgical procedure. Frame preassembly also gives a surgeon the latitude to try some component variations. The disadvantage of a preassembled frame is that it may require adjustments during the surgical procedure, because it is impossible to foresee all necessary modifications, especially in complicated cases.

The chief advantage of the second method of frame assembly is that it affords the surgeon greater experience in practical frame construction details and may help the surgeon avoid having to make corrections during surgery. The primary disadvantage is that piece-by-piece frame assembly requires a great deal of time, adding to an already lengthy surgical procedure.

Some surgeons who are experienced in the Ilizarov technique recommend the first method, and some recommend the second. Professor Ilizarov prefers to construct the frame in advance. We found the intraoperative frame assembly method to be more effective in terms of learning the Ilizarov technique, because it is learned through actual surgical experience. Once the physician has adequate experience, however, the use of a preassembled frame is far more advantageous.

No matter which method is chosen, the surgeon must have a clear idea in each case of the number and sizes of rings required, at what levels and positions these rings must be placed, the types and sizes of ring connectors, and all auxiliary parts that will be used. To formulate all of these frame considerations as clearly as possible, it is useful to trace the radiographic bony outline and draw the frame design on paper or directly on the film.

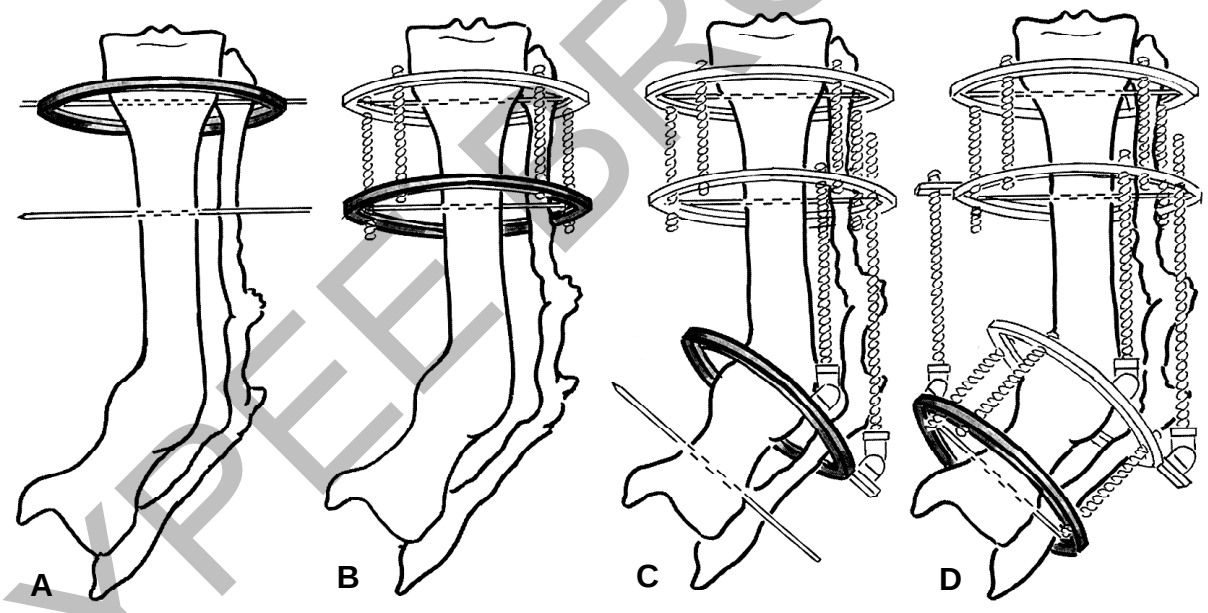

Figure 10.2: Intraoperative method of frame assembly, piece-by-piece during surgery. The tibia-fibula malunion is essentially the same as in **Figure 10.1**, and positioning of the rings is the same. **A,** in the first stage a K-wire is introduced at the site of the proximal ring, and the ring itself is placed over the limb and fixed with a wire. Before the second ring is applied, the K-wire is introduced at the level of this ring. **B,** in the second stage, the next ring *(shaded)* is applied and fixed with the wire. Both rings are then connected by threaded rods. **C,** in the third stage, the third ring *(shaded)* is applied over and connected to the previous ring with threaded rods with hinges. Note that this ring has no transfixing wire because it is positioned at the apex of angulation over the site of osteotomy. However, a wire is introduced for distal ring fixation. **D,** in the fourth stage the distal ring is placed over the wire and fixed to the wire and the rods. Note that the frame configuration is essentially the same as in **Figures 10.1B** and **C**. The projected appearance of the bones will be the same as in **Figure 10.1D**

JAYPEE BROTHERS

RING POSITIONING

The rings are the chief components of any Ilizarov frame configuration. They serve three main purposes: K-wire support, frame formation, and supplementary part support. There are several ring types.

The *main proximal frame supporting ring* (Fig. 10.3A) is stationary and always located at the base of the frame. It bears the weight of the entire construction. In a femoral frame it is replaced by the supporting arch; in the humeral frame it is replaced by the half-ring with extremities.

The *stabilizing frame supporting ring* (Fig. 10.3B) always is located most distally. It can be stationary or movable, depending on frame purpose.

The *pusher-puller ring* (Fig. 10.3C) is a movable ring used for application of distraction-compression forces. It is located distal to the fracture-osteotomy-nonunion site. Depending on frame size, there may be two puller-pusher rings acting simultaneously or in opposite directions.

The *reference ring* (Fig. 10.3D) is medially located ring and used as a reference for the supporting rings or distraction-compression rings; it can be stationary or movable, depending on location.

The ring with combined functional significance is used for such multiple purposes as a pusher-puller ring and a reference ring simultaneously (for angulation correction and pseudoarthrosis distraction-compression).

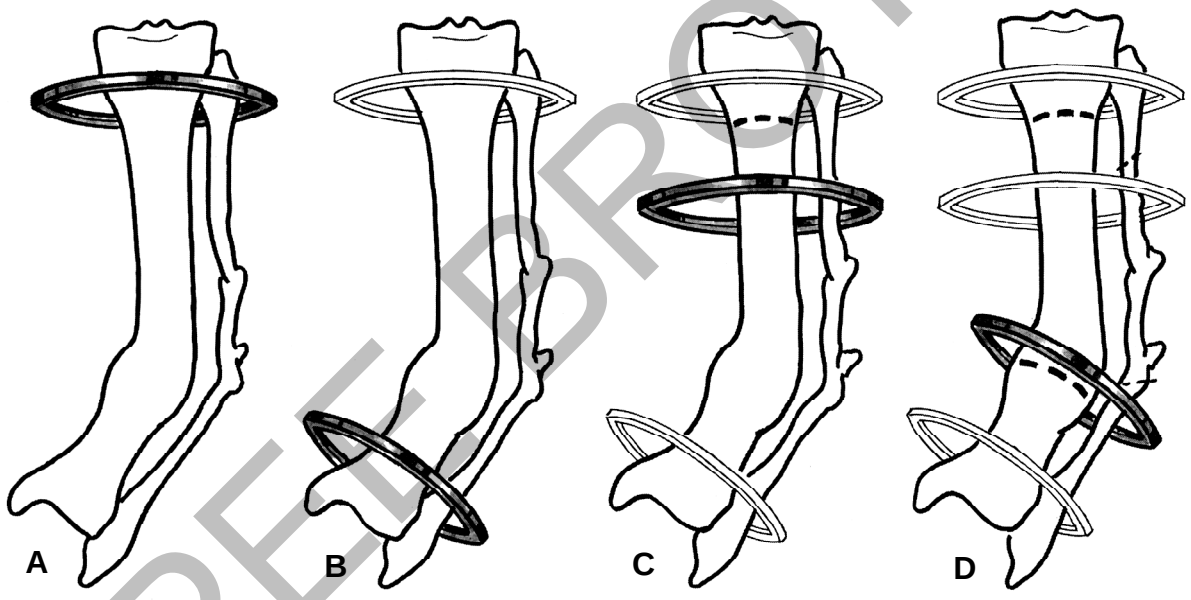

Figure 10.3: Schematic representation of intraoperative frame construction assembled piece-by-piece (during surgery) over the same type of malunion of the tibia and fibula as in **Figure 10.1. A,** stage I: the main frame-supporting ring *(shaded)* is applied to the proximal tibia metaepiphysis at the site of the frame base. This is the stationary ring. **B,** stage 2: The stabilizing frame-supporting ring *(shaded)* is applied to the distal tibial metaepiphysis. Note that it is positioned in angulation to the main supporting ring. Because its position gradually changes as the process of correction of the varus deformity progresses, this ring is considered the "movable" ring. **C,** stage 3: the pushing-pulling ring *(shaded)* is applied distal to the site of a planned osteotomy *(interrupted line).* Note that it is applied parallel to the proximal main ring. This is the movable ring. **D,** stage 4: the reference ring *(shaded)* is applied to the site of tibia angulation deformity at the level of the planned osteotomy *(bottom interrupted line).* Note that it is applied parallel to the distal stabilizing ring. Because its position will change with correction of the varus deformity, it also is a movable ring. Also, since it is not recommended that K-wires be introduced at the apex of a deformity, this ring can be left without wire fixation. Nevertheless, this ring will be transfixed by the offset (drop) wires as soon as the deformity is corrected, and will be used as pushing-pulling ring for the distal osteotomy. Thus this ring is considered to have combined functional significance

JAYPEE BROTHERS

An additional, correcting ring is used for the application of special forces in transverse or oblique directions. Two or three such rings may be used on some frames.

Each ring must be positioned exactly and meticulously around the patient's limb at a particular level and in a correct inclination perpendicular to the bone, on both frontal and sagittal planes.

RING LEVEL

Choice of ring level determines distribution of the forces applied to the ring. The motionless, main supporting ring supports the primary frame stabilization forces; thus it must be located on the strongest and widest part of the bone. Anatomically this is the proximal metaepiphysis, and in most cases the main supporting ring level will be located at the proximal end of the bone. When considering the preservation of the range of motion of the adjacent joint this ring level is located 3 to 5 cm distal to the joint space. In the case of a short frame located distally, the level of this ring is translated distally to the diaphyseal portion of the bone (Fig. 10.4A).

The stabilizing frame supporting ring determines the forces of stabilization and balance located at the frame end opposite the main supporting ring. Depending on frame length, the level of this ring would be located at the distal metaepiphysis (3 to 5 cm from the joint), or transfixed to the diaphysis (Fig. 10.4B).

The pushing-pulling ring determines the direction of the forces of distraction-compression. To act most effectively, these forces must be applied close to the site of the osteotomy, fracture, or nonunion, with consideration of the general principle of preservation of the bone fragment ends; that is, a distance at least 3 to 5 cm must remain.

Depending on the osteotomy, fracture, or nonunion site and the chosen direction of distraction-compression, the pushing-pulling ring may be placed at a level closer to either the proximal or distal supporting rings.

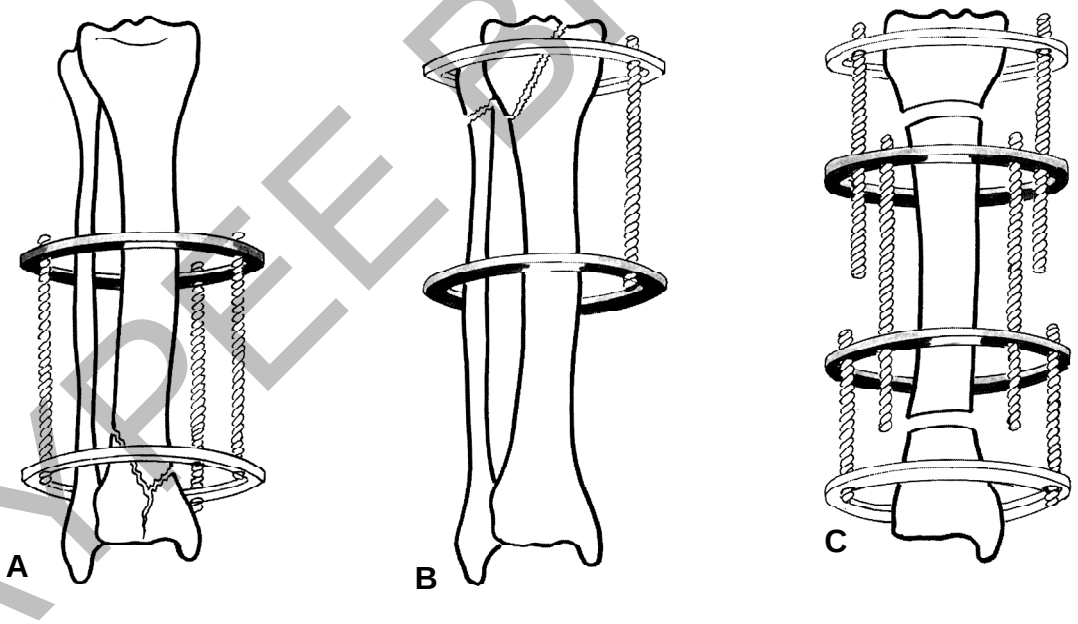

Figure 10.4: Ring levels. Schematic representation of tibial and fibular intra-articular fractures, and bifocal tibial corticotomy, showing various ring levels. **A,** with an Intra-articular fracture of the distal tibia the supporting ring *(shaded)* is in the middle portion of the limb. **B,** with a fracture in the proximal tibia the supporting ring again is in the middle of the limb. **C,** with a bifocal corticotomy the most proximal and distal rings are both supporting rings, whereas the two rings *(shaded)* in the middle area are movable rings that transport the bone fragments

JAYPEE BROTHERS

Correspondingly, it is placed either distal or proximal to the osteotomy gap (Fig. 10.4C). In some cases two pulling-pushing rings are used in one frame, placed near both the proximal and distal supporting rings.

The reference ring (so-called free ring) determines the distribution of the translational forces along the limb, and thus must be placed at the level of the intersection of these forces (Fig. 10.5). In most cases this corresponds to the apex of the bone angulation. Because it is not practical to introduce the K-wires at the apex, the reference ring remains without any wire fixation.

The correcting ring determines the distribution of forces in transverse or oblique directions. For example,

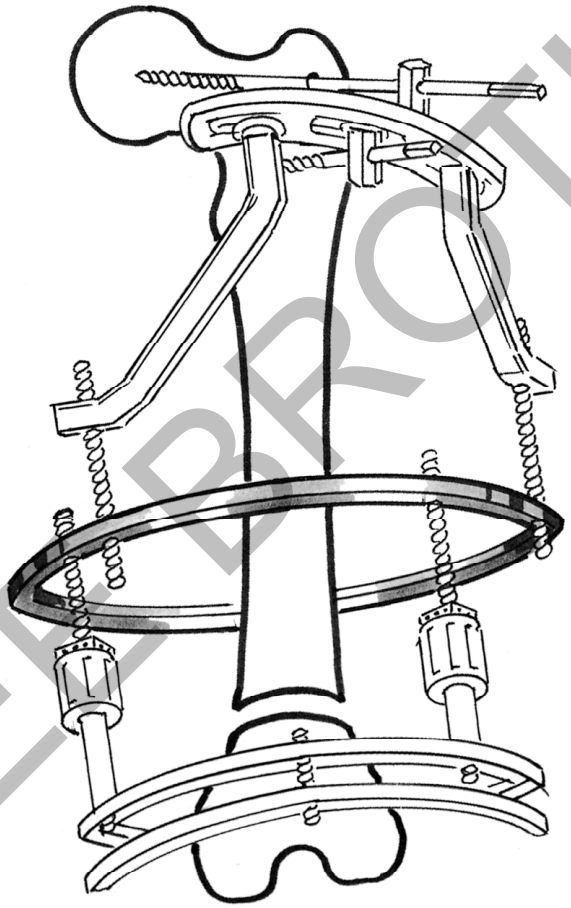

Figure 10.5: Reference or "free" ring *(shaded)*, shown in a schematic diagram of a frame used for femur osteotomy and lengthening

JAYPEE BROTHERS

for the correction of shearing displacement it is necessary to connect two rings with two translational devices. The level of this kind of ring must correspond to the location of corrected segment, leaving a 2- to 3-cm space from the fragment end (Fig. 10.6A).

The ring with combined functional significance determines distribution of forces in multiple directions. For example, if there is need for distraction and derotation, the ring must work simultaneously as a pulling and correcting ring. The location of the ring corresponds to the focal point of the application of these combined forces (Fig. 10.6B).

RING INCLINATION

The choice of the ring inclination determines the direction of the forces applied to the ring. At any chosen level, each ring has to be set in a position of correct inclination in regard to the bone axis. In most cases this inclination is perpendicular to the bone segment-fragment at this level (Fig. 10.7A).

A 90-degree angle of ring inclination is ideal. An angle of 100 degrees would, for example, derange the attachment to the other connected rings. The resultant angle the would place one side of the distal rings too close to the skin or soft tissue, exerting forces that act

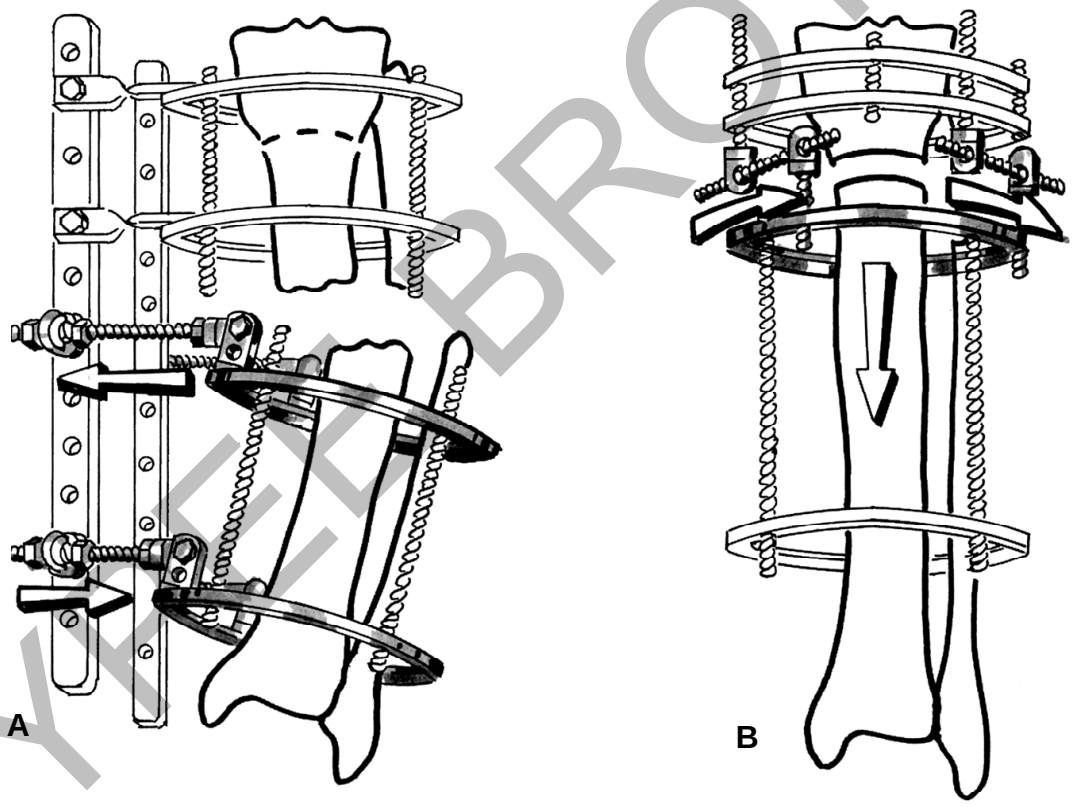

Figure 10.6: A, correcting rings *(shaded).* **B,** ring with combined functional significance *(shaded)*

JAYPEE BROTHERS

under inclination and deforming the limb in the direction of this incorrect angle (Figs 10.7B and C).

To position the ring the surgeon must take into account the surrounding soft tissues, particularly muscle and subcutaneous fat. The ring is not positioned around the exact geometric center, but around the anatomic bony center of fixation. The muscle or fat mass may, however, confound ring inclination. In addition, in some cases there may be soft tissue defects or deep scars. This may confuse even more the determination of correct ring inclination. The only way for the surgeon to determine correct ring inclination is by taking into consideration the bone shape and position on the anteroposterior and lateral radiographic views.

During limb lengthening, muscle tension can influence some deviation in the distracted bone fragment. This possible influence must be taken into account when setting the inclination of the proximal main supporting ring, to ensure prevention of development of deformity, especially in the case of extensive leg lengthening.

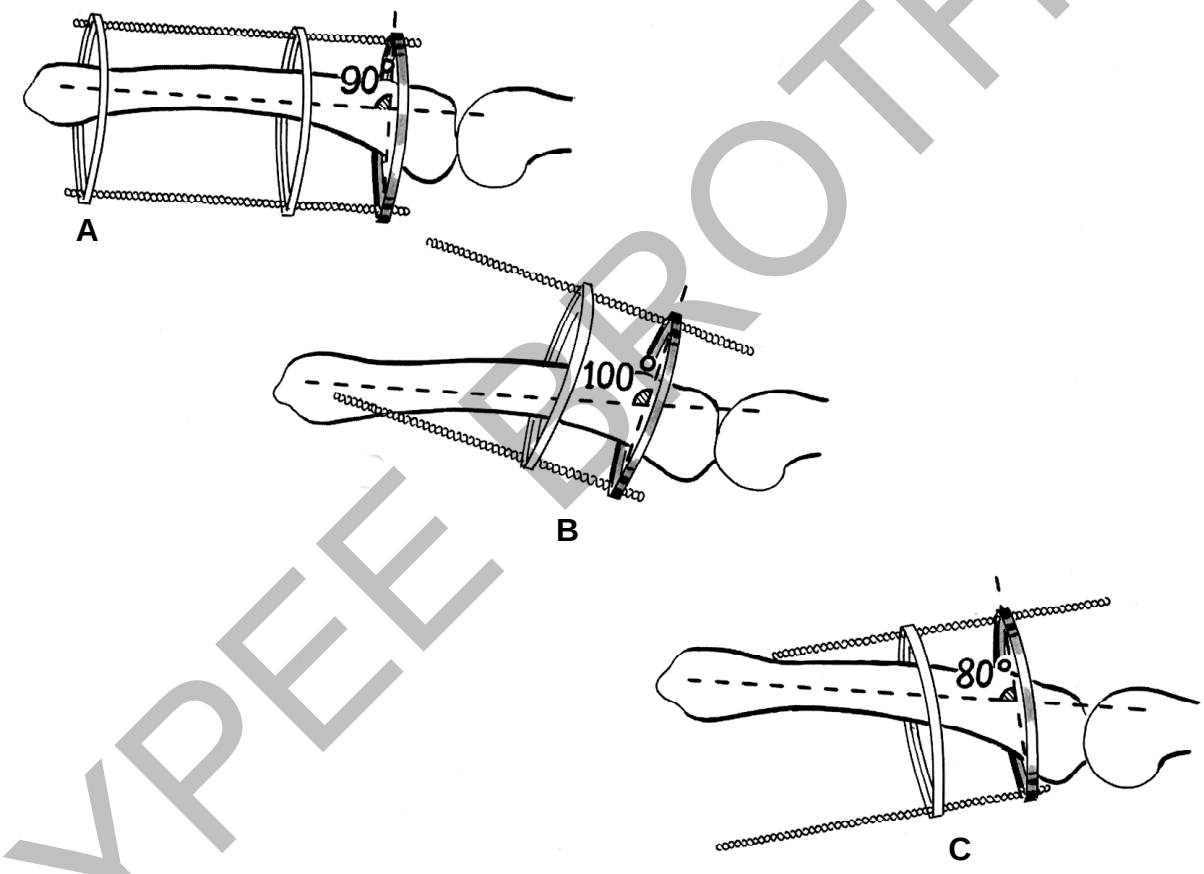

Figure 10.7: Ring inclination in three situations. Lateral view of tibia is represented, with *broken lines* showing the long bone axis and the ring inclination. **A,** main supporting ring *(shaded)* is in a position of 90-degree inclination to the bone axis. The resultant angle is the same for all rings of the frame. **B,** main-supporting ring *(shaded)* is in a position of 100-degree inclination to the bone axis. The resultant angle puts the middle ring too close to the bone at the posterior side and totally deranges the attachment of the distal stabilizing frame supporting ring. **C,** main supporting ring *(shaded)* is in a position of 80-degree inclination to the bone axis. The resultant angle puts the middle ring too close to the bone at the anterior side and again totally deranges the attachment of the distal stabilizing frame supporting ring

JAYPEE BROTHERS

Experience shows that the lateral leg muscles, in particular the tibialis anterior, extensor digitorum longus, and extensor hallucis longus muscles, tend to drag a distal fragment laterally, and the posterior muscles, in particular the soleus, gastrocnemius, and tibialis posterior muscles, tend to drag it posteriorly. In such a situation, these forces can put the distracted leg in a position of valgus deformity and antecurvation.

To prevent the development of this deformity, it is recommended that the proximal ring be tilted. Five degrees of recurvation of this main supporting ring will bring correct positioning of the distracted leg (Fig. 10.8). It is important to remember that in this type of ring inclination an average of 1 cm of difference medially vs. laterally, and anteriorly vs. posteriorly, will produce the 5-degree tilt necessary to lengthen the leg in the correct direction.

In planning femoral lengthening at the proximal osteotomy (corticotomy) site, it is recommended that the proximal main supporting arch be tilted. The tension of the adductor group (the adductor brevis, longus, and magnus muscles) tends to drag a distal fragment medially. Tension of the posterior muscles (particularly the biceps femoral muscle) tends to drag a distal fragment posteriorly. In such a situation, these forces would set the distal femur in a position with a varus and posterior bending deformity.

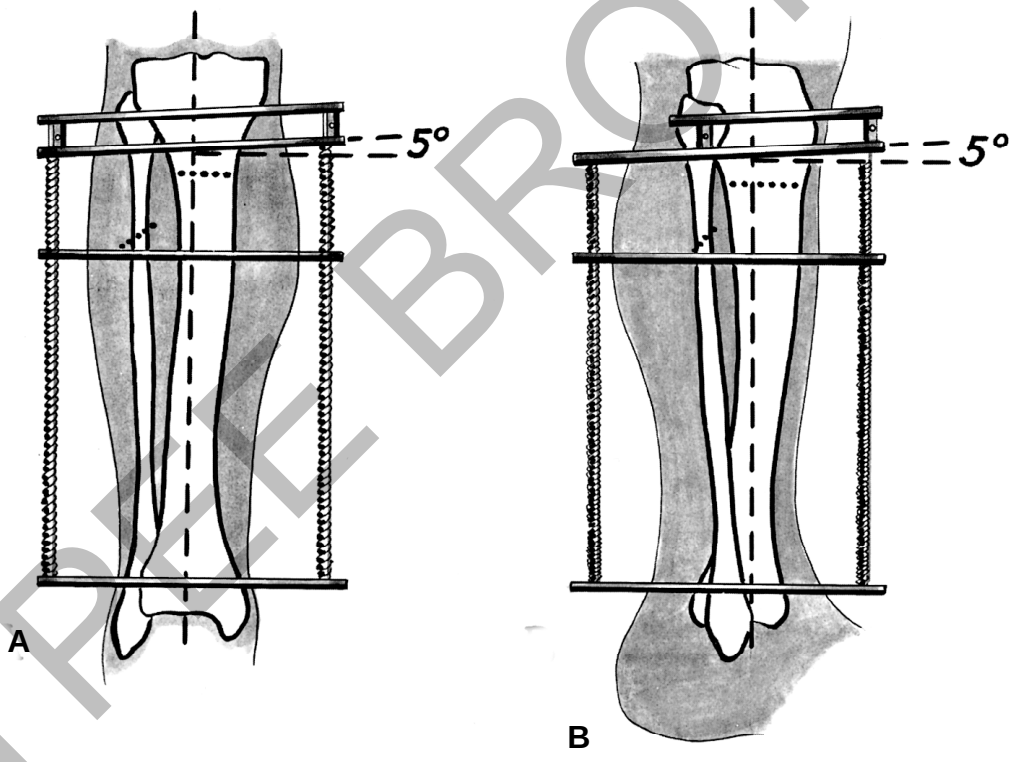

Figure 10.8: Ring positioning in the tibial lengthening frame, anteroposterior **(A)** and lateral **(B)** views. Dotted lines show osteotomy sites; *interrupted lines* show long bone axis. **A,** in anticipation of the osteotomized bone lateral deviation, the main supporting ring is placed in a position of 5 degrees varus inclination. Note that this ring is reinforced by the half-ring. **B**, in anticipation of the osteotomized bone posterior deviation (antecurvation), the main supporting ring together with the reinforcing half-ring is placed in a position of 5 degrees of recurvation inclination

JAYPEE BROTHERS

Seven to 10 degrees of abduction and 5 to 7 degrees of anterior elevation of the main supporting arch will help to achieve the correct positioning of the distal frame (Fig. 10.9A).

In planning an upper arm lengthening at the site of a proximal osteotomy, the proximal main supporting half-ring with curved extremities has to be tilted. Tension of the coracobrachialis muscle and of the triceps brachii muscle (medial head) tends to drag a distal fragment medially. Such a result would set the distal humerus in a position of varus deformity. Five to 7 degrees of abduction of the supporting half-ring will help to achieve correct positioning of the distal humerus (Fig. 10.9B).

There is no need to tilt the rings when considering an osteotomy of the distal site. The reason for this is that muscle tension diminishes at the sites of distal attachment to the bone. Moreover, the frame's proximal component above this level always is stable enough to be able to resist any tendency to drag a distal fragment.

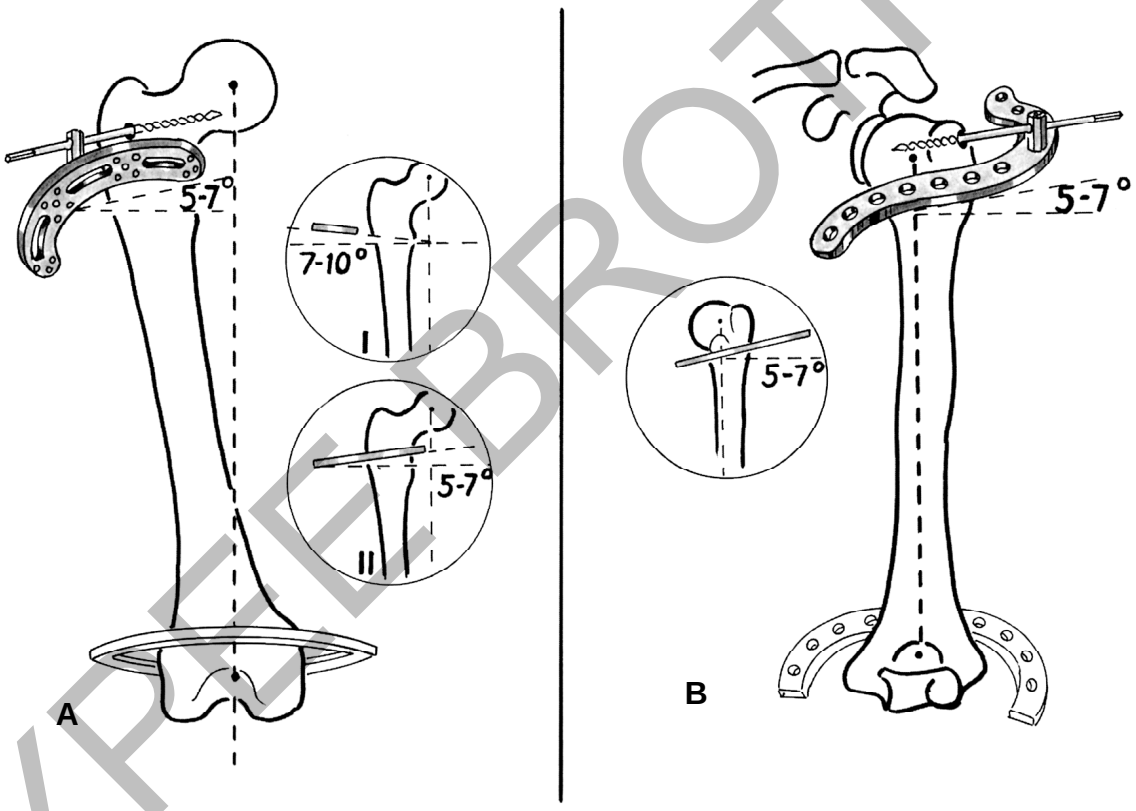

Figure 10.9: Ring inclination in the frames for femoral and humeral lengthening. **A,** femoral bone with the attached main supporting arch *(shaded)* and pulling ring. *Insets,* partial views of the same arch in a position of 7 to 10 degrees of abduction *(I)*, and 5 to 7 degrees of anterior elevation *(II)*. **B,** humeral bone with the attached main supporting half-ring with curved arms *(shaded)* and five-eighths pulling ring. *Inset,* partial view of the same half-ring in a position of 5 to 7 degrees of abduction

JAYPEE BROTHERS

SPACE BETWEEN SKIN AND RING

Independent of the level and angle of any rings, a space, as a rule, at least 3 cm, should be maintained between the inner curve of the ring and the skin. Because the breadth of an extremity varies at different levels, this space also will vary. It is calculated, however, at its narrowest gap. In other areas, this space can extend to 4, 5, and sometimes even 6 cm.

The space between the skin and ring gives the surgeon freedom to manipulate the bolts and nuts, to introduce the threaded rods into the ring holes, and to attach all necessary additional parts. This gap also is important in protecting the skin and soft tissues if swelling occurs, and it permits wire tract care during the duration of the treatment. There are three ways to ensure an adequate skin-ring gap.

The first method is to measure the width of the limb at the anticipated levels of rings. This measurement is performed in centimeters with a measuring tape before frame assembly. The measurement is taken in both frontal and sagittal planes, and only the largest figure is taken into consideration. Adding 6 cm to this figure provides a necessary internal ring diameter, with a secure 3-cm space between ring and skin (Fig. 10.10A).

The second method is to attach the ring of anticipated size over the limb where the surgeon expects to attach it and to ensure a minimum 3-cm gap at its most narrow section. This is a more suitable way of measurement if the frame is being assembled part by part intraoperatively (Fig. 10.10B).

The third method is to introduce standard plastic templates over the limb at the presumed ring levels and to determine at each level which rings provide the necessary skin-ring gap. These templates have been introduced by the Smith and Nephew Richards Company, and can be used before frame assembly or during the procedure (Fig. 10.10C).

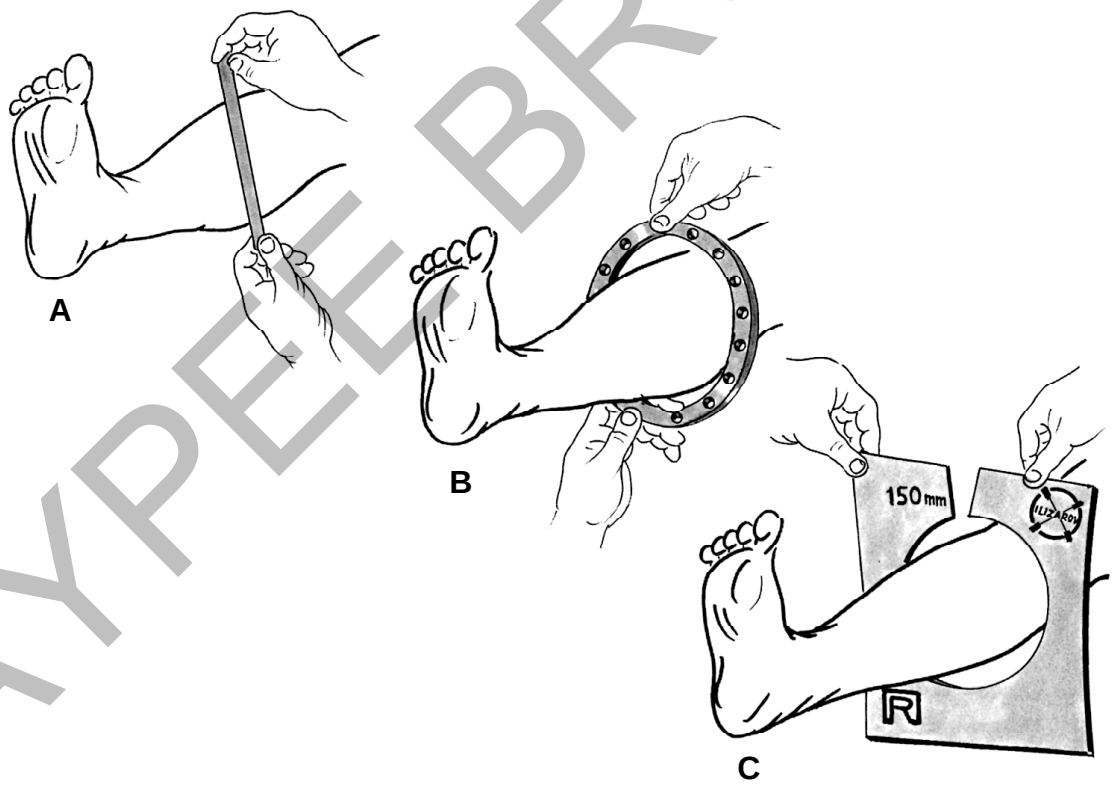

Figure 10.10: Three ways to select a ring of proper size for the leg are shown. **A,** measure the widest part of the leg with the measuring tape and add 6 cm to the obtained figure. **B,** try the proper size ring in advance. **C,** apply a Smith and Nephew Richards special template

JAYPEE BROTHERS

TECHNICAL HINT

TWO-FINGERS BREADTH RULE

An easy technical tip to determine that enough space has been maintained between the ring and the skin is the two-fingers breadth rule. Ensure that the gap between the ring and the skin is at least the width of two fingers by inserting your fingers in this space (Fig. 10.11).

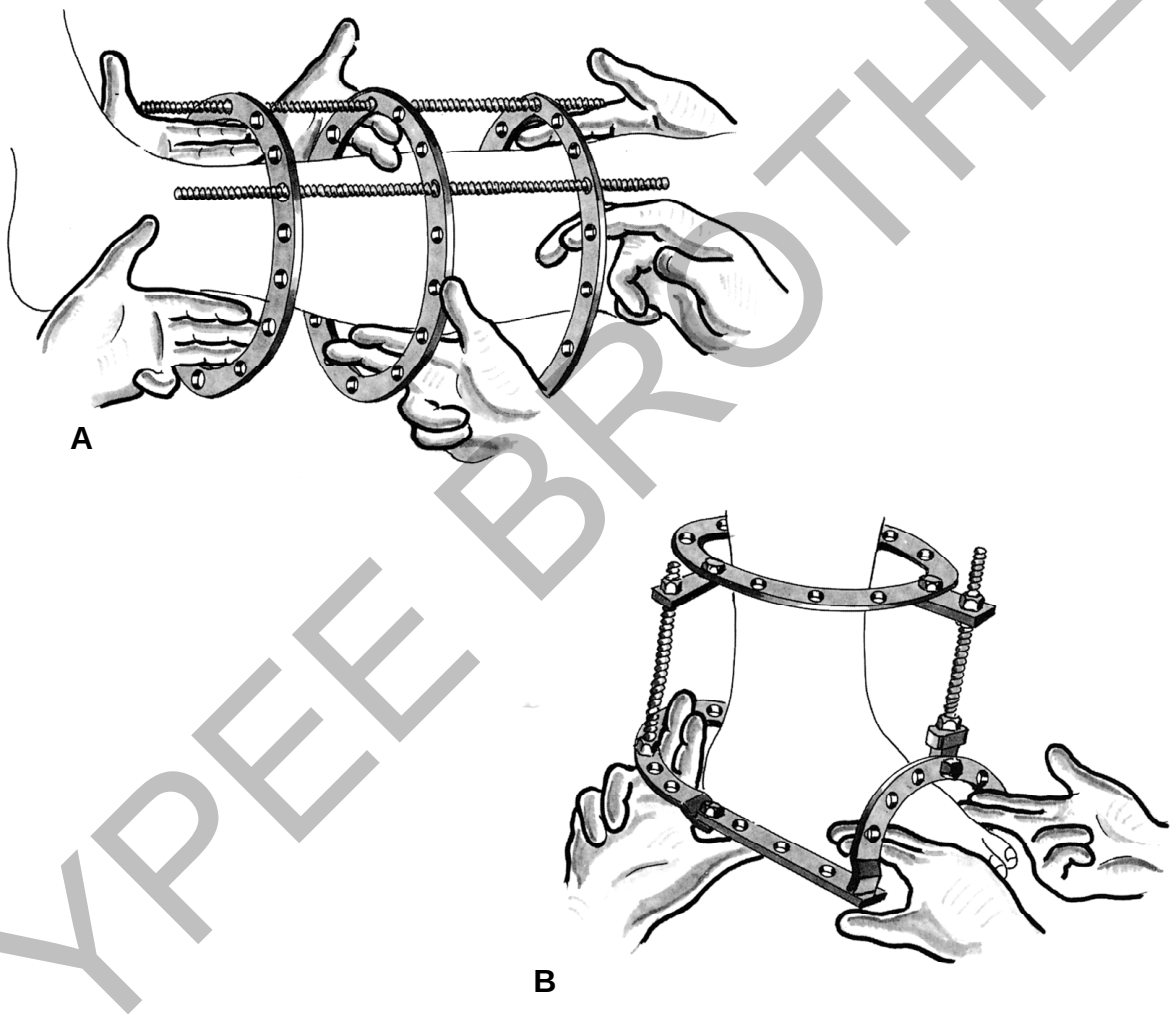

Figure 10.11: A, three-ring frame applied to the leg. At the level of each ring the surgeon's fingers are in the space between skin and ring. Normally this space should be at least two fingers wide. Only at the level of the proximal metaepiphysis on the anterior surface can it be smaller, because not much soft tissue is found there. At the distal site it can be larger. **B,** three-ring frame applied to the foot. Note a two-fingers breadth space between skin and ring

JAYPEE BROTHERS

RING POSITIONING AT OSTEOTOMY / CORTICOTOMY, NONUNION AND / OR FRACTURE SITES

At the sites of osteotomy, nonunion, or fracture with displacement there are always free bone fragment ends. With application of the Ilizarov frame, stability of this free end depends much on the level and positioning of the pusher-puller ring. Considering any forthcoming distraction, compression, bone straightening, or derotation, the closer the ring is placed to the tip of free bone fragment end the more stable this fragment is during all necessary bone movements. At the same time, the bone fragment end structure almost always is weakened by the net of microfractures developed with the bone split during osteotomy or fracture (Fig. 10.12). In the case of nonunion, the free bone fragment structure also is weakened by regional osteoporosis, and sometimes may be icicle shaped. In all of these situations there is a need for the free-fragment-end structure preservation. Hence the pusher-puller ring is placed at some distance from the tip of the free bone end.

Consequently there is something of a contradiction in these recommendations. The ring must be close to the tip of the bone, but also must be distant enough to permit access to the frame parts. In choosing the proper ring level in relation to the free bone fragment end, the surgeon must consider all of these aspects and find a

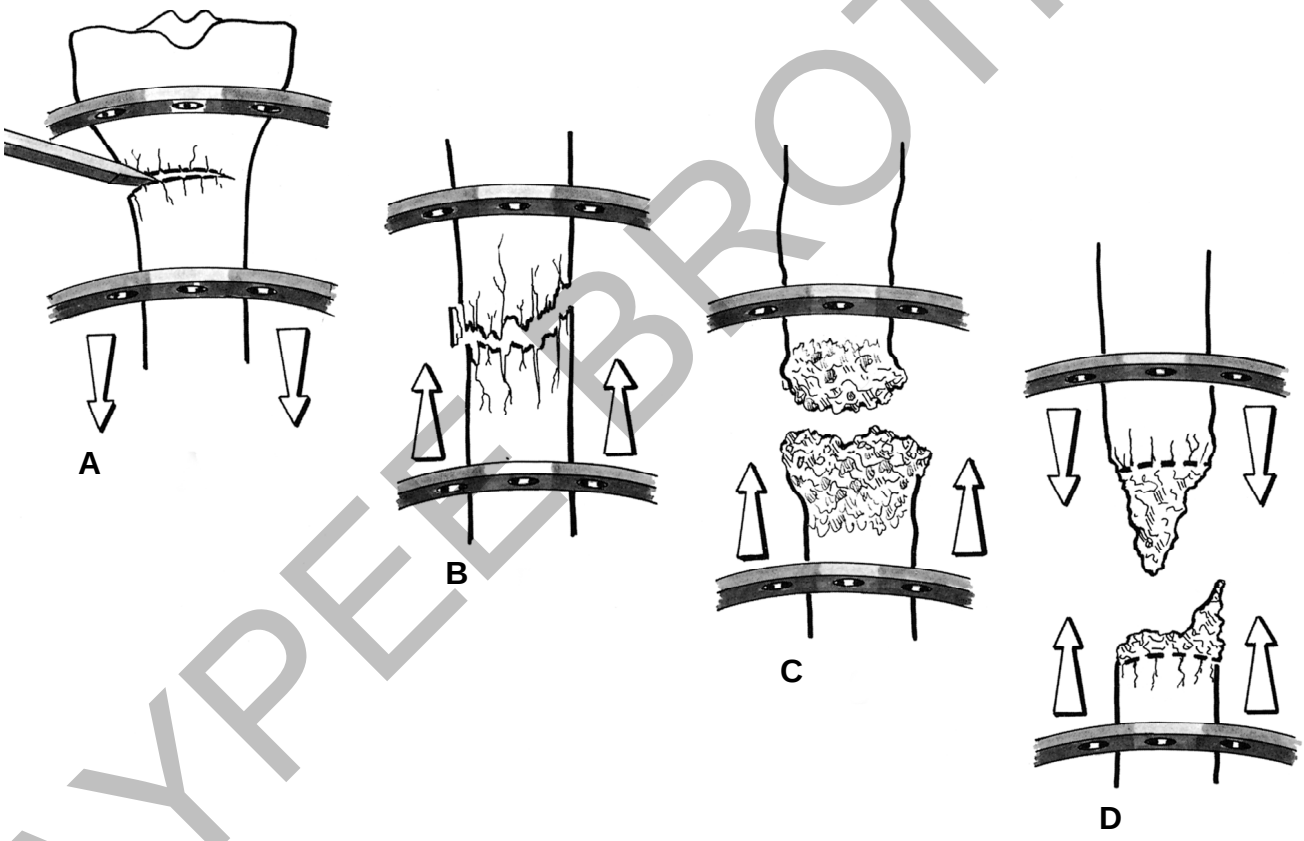

Figure 10.12: Four sectional views of the bone and rings positioned above and below an osteotomy, fracture, and nonunion. *Arrows* show the direction of the bone fragment movement. **A,** performance of osteotomy (corticotomy) by the narrow osteotome and the net of microfractures developed at the bone fragment ends. The rings are positioned close to the osteotomy site but far enough from the microfractures. **B,** fresh bone fracture creates a more significant microfracture net. The rings are positioned slightly farther from the fragment ends than in **A. C,** bone nonunion with regional osteoporosis. The rings are positioned just to the side of the osteoporotic areas. **D,** bone nonunion with the icicle-shaped osteoporotic free ends. *Broken lines* show bone resection sites. The net of microfractures is expected to appear as a result of resection. The rings are positioned with consideration of the bone resection and microfractures, and thus are placed far to the side of the nonunion

JAYPEE BROTHERS

suitable solution for each case. As a rule, the pusher-puller ring should be situated no closer than 2 cm and no further than 4 to 5 cm from the tip of the fragment end.

RING ORIENTATION

Regardless of the level, inclination, or angulation at which different rings of the same frame are positioned, they all must be aligned in a configuration in which the connecting parts of the half-rings are situated along the same straight line (Fig. 10.13A). This orientation puts the corresponding holes of all rings along the same straight lines, thus making ring connection, especially with the threaded rods, relatively easy. More important, this manner of ring orientation establishes the positioning of the rings in relation to the long bone axis. For example, in the case of rotational deformity correction this parallel ring alignment contributes to the control of derotation. By following the two neighboring half-ring connections above and below the rotation level, a degree of derotation can be established (Fig. 10.13B).

As soon as the ring level, inclination, skin surface relation, and orientation are established and reconfirmed, the rings should be transfixed to the bone with K-wires.

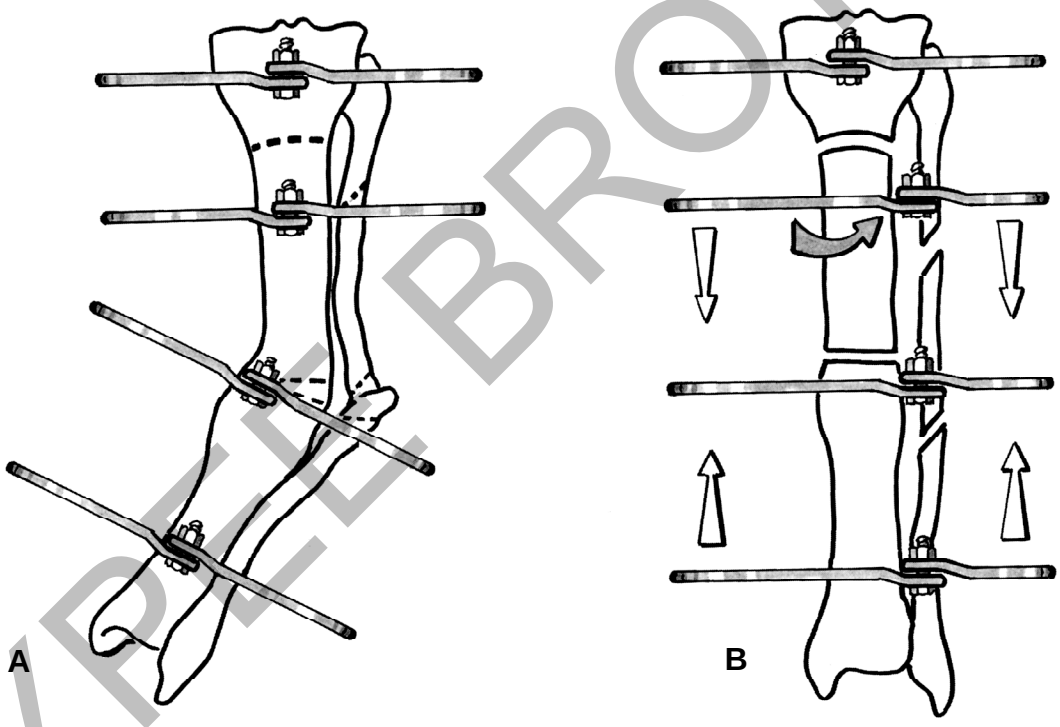

Figure 10.13: Ring orientation is shown in a schematic representation of tibia-fibula varus and rotational deformity with a four-ring frame. **A,** rings at different levels and in different inclinations all are oriented so that the connections of the half-rings are aligned on the same straight line, over the tibial anterior border. Sites of osteotomy are shown by *broken lines.* **B,** after varus and rotational deformity correction, all rings are parallel to each other, and bone fragments are in good alignment. *Arrows* show the direction of distraction, compression, and derotation. Note that the orientation of the proximal main stabilizing ring and the pulling ring next to it is now different: the half-rings connection to the pulling ring is rotated externally *(shaded arrow)*. Other rings are in the same orientation as the pulling ring

JAYPEE BROTHERS

Textbook of

ILIZAROV SURGICAL TECHNIQUES

Bone Correction & Lengthening

This *Textbook of Ilizarov Surgical Techniques: Bone Correction and Lengthening* is written by authors not to explain comprehensively all the aspects of the basic and clinical science of bone healing, but rather for the purpose to instruct the surgeon in the methods of applying the Ilizarov external fixator for bone correction and lengthening. The book includes a chapter on the new developments in this technique.

Vladimir Golyakhovsky was born in Russia and trained as an orthopedic surgeon. Part of his training was in learning the Ilizarov techniques under the supervision of Dr Ilizarov himself. He became the Professor and Chairman of Orthopedic Surgery at the Moscow Medical School. Later on, he immigrated to the USA; and at the age of 48, he started his career from scratch. He became an orthopedic surgeon again and was made a Professor for the second time in his life.

Victor H Frankel is one of the leading American orthopedic surgeons well known for his publication of the books and papers, formerly a Chairman of the Department of Orthopedic Surgery of NYU and the President of the Hospital for Joint Diseases in New York, USA. He pioneered the Ilizarov techniques in America, and together with Dr Golyakhovsky has promoted it to many countries in North and South Americas.

Available at all medical book stores
or buy directly from Jaypee Brothers through online shopping at www.jaypeebrothers.com

or call + 91-11-32558559

JAYPEE BROTHERS
Medical Publishers (P) Ltd.
www.jaypeebrothers.com

ISBN 978-81-8448-933-0