PRACTICAL CLINICAL BIOCHEMISTRY

Shruti Mohanty
Aparna B Varma

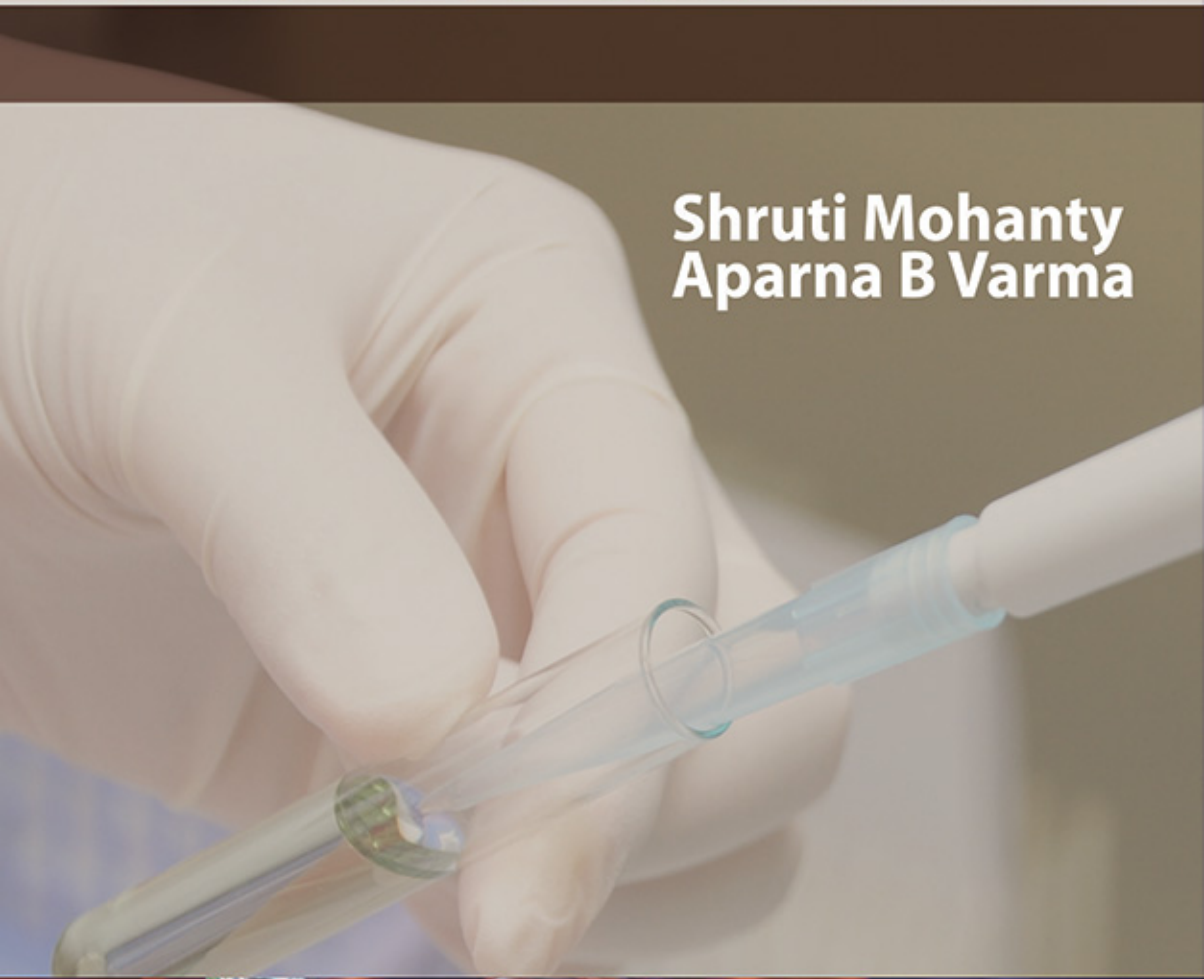



JAYPEE

Contents

1. Basic Laboratory Principles and Safety Measures 1

Volumetric Equipment 1
Units and Reference Values 1
Regulations and Safety Precautions in Clinical Laboratory 2
Collection and Handling of Specimens 2
Collection of Blood 3
Collection of Urine 3
Summary Chart for the Collection and Dispatch of Specimen for Biochemical Tests 3

2. Qualitative Analysis 4

Carbohydrates 5

Introduction 5
Properties of Monosaccharides 6
Properties of Disaccharides 14

Proteins 20

Introduction 20
General Reactions of Proteins 20
A. Precipitation Reactions of Proteins 21
B. Color Reactions of Proteins 25
Reactions of Albumins and Globulins 28
Reactions of Gelatin 30
Reactions of Peptones 31
Reactions of Casein 33

Urine Analysis: When and Why 38

Urine Analysis: Normal Constituents of Urine 38
Normal Constituents of Urine in A 24-Hour Sample 39
Urine Collection and Preservation 39
Conditions Imparting Abnormal Color to Urine 42
Chemical Examination 44
Organic Constituents of Normal Urine 44
Inorganic Constituents of Urine 47

Abnormal Constituents of Urine 53

Reducing Sugars 53
Benedict Semiquantitative Test 54
Blood Pigments 55
Protein 57

Bile Salts, Bile Pigments and Urobilinogen 58
Bile Salts 59
Bile Pigments 59
Urobilinogen 61

3. Quantitative Analysis 65

Introduction to Quantitative Analysis 65
Quality Control 67

Colorimetry 69
Steps in the Operation of the Photoelectric Colorimeter 70
Calculation 70

Blood Glucose Estimation 71
Clinical Conditions 72

Estimation of Blood Urea 76
Reagents 76

Estimation of Urinary Creatinine 81
Lohmann Reaction 81

Total Serum Protein Estimation 87
Reagents 87
Albumin 89
Globulins 90
Albumin/Globulin (A/G) Ratio 91

Cerebrospinal Fluid Analysis 95
Introduction 95
Lactate 97
Lactate Dehydrogenase 97
White Blood Cell (WBC) Counts 97
Red Blood Cell (RBC) Counts 98
Gram Stain 98
Qualitative Tests for Globulin 100

Serum Bilirubin 104
Introduction 104

Estimation of Serum Bilirubin 104
Reagents 104

Estimation of Serum Uric Acid 111
Introduction 111

Demonstration Experiments 116
Glucose Tolerance Test (GTT) 116
Types of Glucose Tolerance 118

4. Electrophoresis **122**

Analytes Separated by Electrophoresis 123
Schematic Diagram of an Electrophoresis Apparatus 124

5. Chromatography **129**

Separation of Amino Acids by Paper Chromatography 130
Application of Chromatography 131
Advantages and Disadvantages 131
Different Forms of Chromatography 132

Appendices **133**
Index *141*

Chapter 4

Electrophoresis

Electrophoresis is a comprehensive term that refers to the migration of charged particles in a liquid medium under the influence of electric field. It is a versatile and powerful analytical technique used to separate and analyze a diverse range of ionized analytes.

ANALYTES SEPARATED BY ELECTROPHORESIS

- Proteins and peptides
- Nucleotides and nucleosides
- Organic acids
- Hemoglobin variants
- Lipoproteins
- Isoenzymes, etc.

Principle: An ampholyte or Zwitter ion which is neither positively nor negatively charged, takes positive charge in acidic media and negative charge in alkali media. Hence in electric field they migrate towards cathode (positive charged) and anode (negative charged) respectively.

The rate of migration depends upon–

1. Net electric charge
2. Size and shape of molecule
3. Electrical field strength
4. Properties of supporting media
5. Temperature

Electrophoretic mobility is defined as rate of migration (cm/s) for unit field strength (volts/cm)

Q $\rightarrow$ net charge
r $\rightarrow$ ionic radius
n $\rightarrow$ viscosity of buffer
μ $\rightarrow$ electrophoretic mobility

JAYPEE BROTHERS

$$\mu = \frac{Q}{6\pi r\eta}$$

Electrophoretic mobility is directly proportional to charge and inversely proportional to size and viscosity.

Procedure:

1. Instrument: A typical electrophoretic apparatus should have –
   1. Buffer chamber: two in number which has platinum electrodes, connected to power supply.
   2. An electrophoretic support media on which separation takes place which is in contact with buffer solution.

The entire apparatus is covered to minimize the evaporation of buffer.

SCHEMATIC DIAGRAM OF AN ELECTROPHORESIS APPARATUS

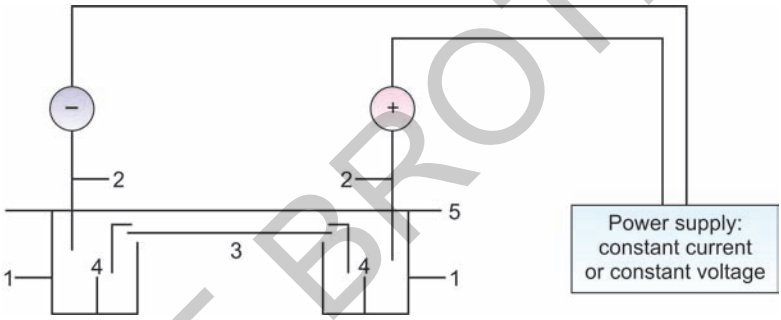

1. Buffer chamber 2. Connecting wire to the power source 3. Support media 4. Wicks dipping into the buffer (for completing the electrical circuit) 5. Lid

1. **Support media:**
   Gels are more commonly used–Agarose, cellulose acetate, polyacrylamide gel
   a. **Agarose:** Agar has agaropectin, a charged acidic polysaccharide with monomers of sulfated galactose and carboxylic side groups. Agarose is a purified, sulfate free fraction of Agar. It is free of ionizable groups and is therefore neutral. Pore size is large and independent of concentration when compared to molecular size of proteins. Hence separation is based only on charge to mass ratio of the proteins.
   Advantages: Lower affinity to proteins, clarity after drying, can be stored indefinitely and excellent in densitometric determination.
   b. **Cellulose acetate:** Cellulose is treated with acetic anhydride; the OH groups are acetylated to from cellulose acetate. Cellulose acetate has small pore size and hence is used regularly for hemoglobin electrophoresis.
   Advantages: Better resolving power than paper and better speed.
   c. **Polyacrylamide gel:** Polymer of acrylamide. Several layers of gels of different pore sizes are used. This gel has a high loading capacity and is routeinly used to separate DNA and individual proteins like isoenzymes. Gels are uncharged and are commercially available with variety of pore sizes.

JAYPEE BROTHERS

2. **Power supply**: The function is to supply power during the electrophoresis process. It allows regulation of conditions like operation at constant voltage, current or power which are all adjustable as per the requirements.
3. **Buffers:** Buffers can affect the charge on the ampholyte by change in pH and ionic strength.

Multifunctional components:

1. Carries the applied current
2. Establish the pH
3. Determine the electrical charge of the solute.

Commonly used: Barbitone buffer (pH = 8.6)
Tris Boric Acid buffer

4. **Fixative:** 90% acetone
5. **Stains:** Used to visualize and locate the separated analytes.
   Serum proteins → Amidoschwarz, Bromophenol blue, Lissamine green.
   Isoenzymes → Nitrotetrazolium
   Lipoproteins → Sudan black; oil Q red.
   DNA → Ethidium bromide
   CSF proteins → $AgNO_3$
6. **Destaining agent:** 2% glacial acetic acid
   Automated systems: Commercially available automated systems are available with prepacked gels.

Types of Electrophoresis

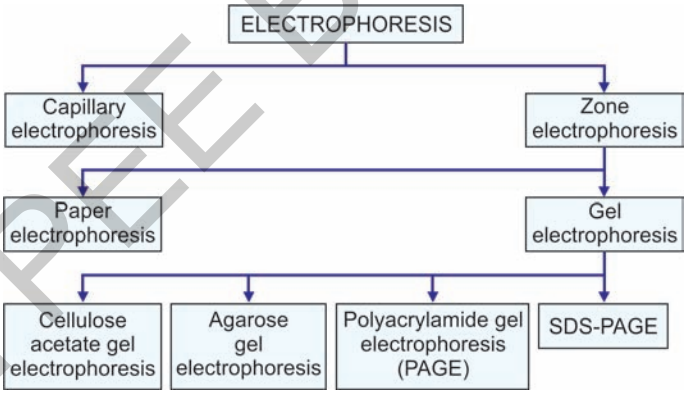

Advanced Techniques of Electrophoresis Now in Routine Use

1. Immunoelectrophoresis
2. Isoelectric focusing
3. Blotting techniques

JAYPEE BROTHERS

General Procedure for Serum Protein Electrophoresis

1. **Preparation of slides:** Dissolve 200 mg of pure agarose in 20 ml of barbitone buffer and boil in water bath to dissolve it completely and make a homogeneous solution. Place slide on a leveled glass plate. Then with a prewarmed fast delivery pipette, pour carefully 2 ml of gel on each slide so that it spreads uniformly. Allow the gel to set. They can be stored in a moist Petri dish and covered with a filter paper.
2. **Loading of samples:** With the help of a piece of coverslip, make a well of about 5 mm deep at about 1 cm away from the margin. Place the slide in the chamber, and connect the ends of the slide with the buffer solution with the help of a filter paper wick. The slide is placed such that the well is at the negative electrode. This is because, proteins are negatively charged in this buffer system and hence they migrate towards positive electrode. The sample to be run is stained usually and 5 µl of the sample is loaded in the well with the help of a capillary tube or micropipette (It is recommended to run a control).
3. **Electrophoretic run:** Care is taken that the electrophoretic chamber is on a leveled surface. The two buffer compartments are filled. The chamber containing the loaded slide(s) is covered with a lid provided and the power is put on. The current is usually adjusted at 7 amp/slide and the voltage is usually maintained at 280 MV. The run is allowed for 45 min–1 hour. Care is taken that the sample does not dribble from the other end.
4. **Fixing & Staining:** After the run, the power is switched off and the slide is taken out. It is put in fixing solution for 15 min and the removed and placed in staining solution for 2 – 3 min. Excess stain is removed by washing and destaining. Scan the slide with a densitometer and quantitate the bands formed.

Clinical Significance

In clinical laboratory, electrophoresis is employed regularly for separation of serum proteins. Albumin has the maximum and γ-globulin has the minimum mobility in the electric field.

Abnormal Patterns in Disease

A number of pathologic conditions are associated with a characteristic serum protein electrophoresis pattern.

1. **Hepatic Cirrhosis:**
   When liver function is sufficiently diminished, protein synthesizing capacity is compromised and concentrations of albumin and proteins in the alpha and beta bands are decreased. An additional common finding is beta-gamma bridging due to increased IgA.
2. **Nephrotic Syndrome:**
   Renal disease involving the glomeruli is always associated with increased urinary protein loss. When protein loss is greater than 3 – 4 g/day, the protein synthesizing capacity of the liver is exceeded and hypoproteinemia, accompanied by anasarca, develops to cause the nephrotic syndrome. The massive urine protein loss is due to increased permeability of glomeruli to protein. The permeability increase may

JAYPEE BROTHERS

be minimal so that only albumin and other smaller molecular weight proteins are selectively filtered (selective nephrosis, as in Minimal change disease) or may be greater so that larger proteins are also filtered (nonselective nephrosis, as in membranous glomerulonephritis) as is the case in the example shown. Alpha-2-macroglobulin is sufficiently large so that it is not filtered and increased synthesis (from the general hepatic protein synthesis) causes its accumulation. Lipoproteins are also sufficiently large to accumulate and hyperlipidemia is a characteristic of the nephrotic syndrome, although lipoproteins are not stained with the protein stain used in visualizing proteins.

3. **Alpha-1-Antitrypsin Deficiency:**
   A genetic defect causes a deficiency of alpha-1-antitrypsin. The antiprotease deficiency results in a propensity to develop emphysema. Since alpha-1-antitrypsin is the major component of the alpha-1 band, deficiency is suggested by a reduced alpha-1 band. Deficiency is confirmed by specific immunochemical quantification.
4. **Acute Inflammation:**
   The alpha-1 and alpha-2 bands are increased during the inflammatory response from increased hepatic synthesis of acute phase reactant proteins.
5. **Chronic Inflammation:**
   Immunoglobulin synthesis by antigen activated B lymphocytes transformed to plasma cells is demonstrated by the increased polyclonal gamma band.
6. **Immunoglobulin Deficiency:**
   Deficient immunoglobulin synthesis is revealed by a markedly diminished gamma band. Effected individuals are prone to recurrent infection.
7. **Monoclonal Gammopathy (Multiple Myeloma):**
   An unusually sharp band in the gamma region strongly suggests the presence of a homogeneus immunoglobulin and, thus, the malignant proliferation of plasma cells from a single cell (multiple myeloma) in contrast to the broad, heterogeneous, or polyclonal, gamma band as exhibited above in chronic inflammation from immunoglobulin synthesis by many different clones of plasma cells. Homogeneous immunoglobulins are also found in Waldenstrom's macroglobulinemia (where the sharp gamma band is always IgM).

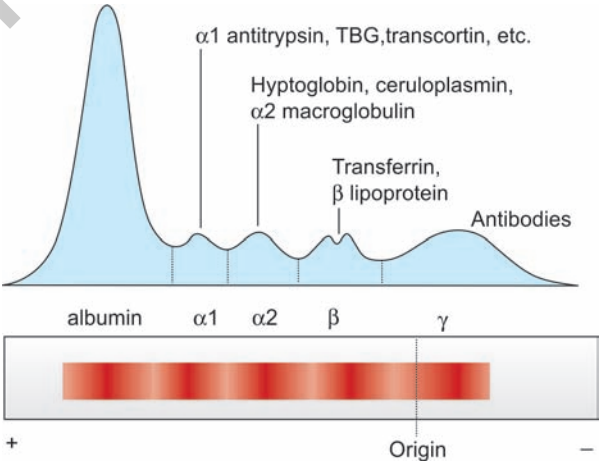

JAYPEE BROTHERS

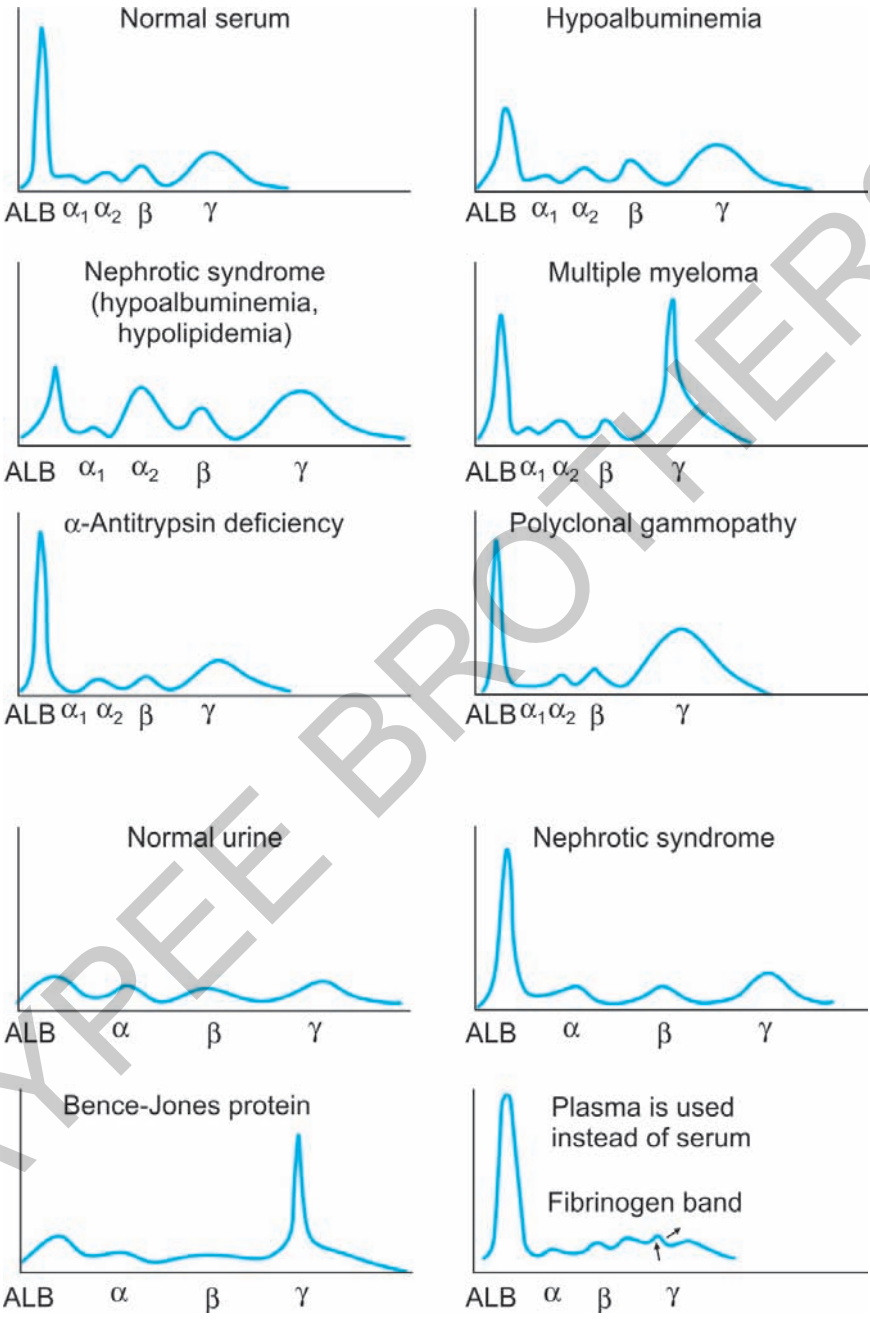

Serum protein electrophoresis–Classical pattern

JAYPEE BROTHERS

PRACTICAL CLINICAL BIOCHEMISTRY

Practical Clinical Biochemistry is not only a practical book but also bridges the gap between basic science and clinical application. The relevance of the tests done is emphasized and the various tables and diagrams will enable the students to remember and retain better.



Shruti Mohanty MD is presently the Professor and Head, Department of Biochemistry at Kamineni Institute of Medical Sciences, Narketpally, Andhra Pradesh, India. She is actively involved in professional activities of undergraduate and postgraduate students for more than fourteen years. She has postgraduated from Maharaja Krishna Chandra Gajapati (MKCG) Medical College, Berhampur, Odisha, India after completing MBBS from Veer Surendra Sai (VSS) Medical College, Burla, Odisha, India. She is awarded the prestigious Foundation for Advancement of International Medical Education and Research (FAIMER) Fellowship from GSMC; Mumbai, Maharashtra, India in 2008. She has received the best teacher award in her institution. She is a faculty of Medical Education Unit (MEU) of her college.



Aparna B Varma MD is a Professor and Head, Department of Biochemistry at MediCiti Institute of Medical Sciences, Ghanpur, Medchal Mandal, Ranga Reddy, Andhra Pradesh, India. She did her MD in Biochemistry from Osmania Medical College, Hyderabad, Andhra Pradesh, India after completing her MBBS from Kakatiya Medical College, Andhra Pradesh. She has 13 years of experience teaching medical students (undergraduates and postgraduates) and training them in research activities. She is the coordinator for Indian Council of Medical Research-Short Term Studentship (ICMR-STS) and faculty research projects, coordinator for integrated teaching, member of Medical Education Unit and member of library committee. She has publications—national and international in the area of fluorosis and cardiovascular diseases. Her present area of interest is noncommunicable diseases with an emphasis on cardiovascular diseases.

Available at all medical book stores
or buy directly from Jaypee Brothers through online shopping
at www.jaypeebrothers.com

JAYPEE BROTHERS
Medical Publishers (P) Ltd.
www.jaypeebrothers.com

Shelving
Recommendation
BIOCHEMISTRY

ISBN 978-93-5090-465-7