ntal books, visit our website **www.jaypeebrothers.com,** for detailed information on dental book

**Subject Covered**

• Dental Material, Operative Dentistry and Prosthodontics • Dental Histology • Dental Anatomy • Endodontics • Pedodontics • Periodontics • Orthodontics • Oral Pathology • Radiology • Oral and General Surgery • Anatomy • Biochemistry • General Pathology • Microbiology • Physiology • Pharmacology • General Medicine • Community Dentistry

# SMART DENTAL REVISION



SURAJ KUMAR

**Covered last 9 years questions, (2013 to 2005)**
**It covers various entrance examinations:**

- **AIPG**
- **PGI Chandigarh**
- **AIIMS**
- **KCET Karnataka**
- **COMED-K**

# Contents


| | | |
|---|---|---|
| 1. | Dental Material, Operative Dentistry and Prosthodontics | 1 |
| 2. | Dental Histology | 76 |
| 3. | Dental Anatomy | 91 |
| 4. | Endodontics | 100 |
| 5. | Pedodontics | 124 |
| 6. | Periodontics | 140 |
| 7. | Orthodontics | 167 |
| 8. | Oral Pathology | 239 |
| 9. | Radiology | 301 |
| 10. | Oral and General Surgery | 323 |
| 11. | Anatomy | 377 |
| 12. | Biochemistry | 401 |
| 13. | General Pathology | 417 |
| 14. | Microbiology | 441 |
| 15. | Physiology | 468 |
| 16. | Pharmacology | 487 |
| 17. | General Medicine | 523 |
| 18. | Community Dentistry | 558 |

CHAPTER

# 4 Endodontics

**Topic**

- Anatomy of Pulp
- Endodontic Microbiology
- Diseases of Pulp and Periradicular Tissues Their Diagnosis and Treatment Plan
- Endodontic Treatment of Primary and Young Permanent Teeth
- Biomechanical Preparation of Canal, Disinfection and Obturation
- Bleaching
- Traumatology
- Endodontic Surgery and Miscellaneous

## ANATOMY OF PULP

- Innervation of pulp:

| |
|---|
| Nerve bundle that enters the pulp consists principally of sensory afferent nerves of trigeminal nerve and sympathetic branches of superior cervical ganglion. Each bundle consists of my and unmyelinted nerve. As nerve bundle ascends coronally, the myelinated nerve gradually lose their myelin sheath .So there is a proportional increase in unmyelinated nerves in coronal aspect of teeth. Most of the nerve bundles terminate in subodontoblastic plexus as free, unmyelinated nerve endings and small numbers of nerves pass between odontoblastic cell bodies to enter the dentinal tubules. |
| C fibers are 80% in pulp (0.3 to 1.2 μm in diameter)<br>They conduct THROBBING + ACHING pain. Conduction velocity is 0. 4–2m/ sec |
| A Δ fibers (2–5 μ in diameter) conducts sharp PRICKING pain (COMEDK 11) with velocity of 6 to 30 m/sec |

- Collagen fibers in pulp:

| |
|---|
| Pulp has type 1 and type 3 collagen<br>**Note:** ALL oral hard and soft (gingival) tissues have type 1 (predominantly) and type 3 collagen |

- Maxillary central incisor → pulp is SHOVEL shaped + has pulp horn [Q]
- Pulp chamber:

| |
|---|
| LARGEST pulp chamber → maxillary 1st molar |
| LARGEST pulp chamber in single rooted teeth → maxillary canine |
| sharp demarcation between pulp chamber and canal in posterior teeth BUT is indistinct in single rooted teeth, (e.g. maxillary 1st premolar) |

JAYPEE BROTHERS

- Mandibular 1st molar:

| |
|---|
| MB orifice below MB cusp |
| ML orifice below central groove |
| Distal orifice placed centrally bucco lingually |

- Root bifurcation:

| |
|---|
| SUDDEN disappearance of canal RDIOLUCENCY indicates canal BIFURCATION |
| Among single rooted teeth, bifurcated canal are commonly seen in MANDIBULAR 1st premolar (KCET 12). Next in line are mandibular incisors and canine |
| NOTE: MAXILLARY central incisor and canine are least common teeth to show bifurcated root canal [Q] |

- Teeth and percentage of occurrence of canal:

| TEETH with accessory canals | Percentage of teeth |
|---|---|
| 2 canals in mandibular premolar | 10–25 % |
| $DB_2$ canal in mandibular 1st molar | 30 % |
| 2 canals in mandibular incisors | 41 % |
| Maxillary 1st molar with $MB_2$ canal | 84 % |
| Maxillary 1st premolar 3 canals *(PGI june 12)* | 6 % |

- %age of 2 canals in mandibular premolars: 10 to 25%

| |
|---|
| 1st premolar → 23% |
| 2nd premolar → 12% |

- In maxillary 1st molar: $MB_2$ Canal is located lingual to MB canal
- Mandibular 1st molar:

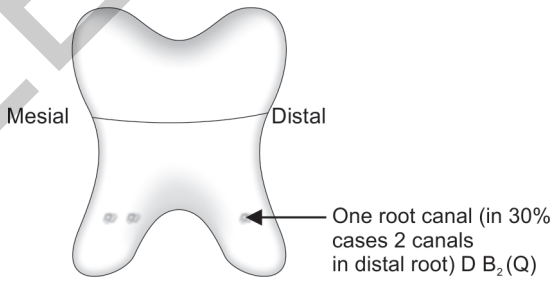


**Fig. 4.1:** Mandibular 1st molar

2 canals are commonly found in MESIAL root *(COMEDK 08)*

- C-shaped canal:

| |
|---|
| Mandibular 2nd molar show C–shaped canal (most common) |
| Also seen in mandibular 3rd molar and maxillary 3rd molar |

- Major diameter = apical foramen
- Minor diameter = apical constriction *(COMEDK 09)*

JAYPEE BROTHERS

## LAST 5-YEAR QUESTIONS FROM THIS TOPIC

**1. The maxillary 1st premolar will typically demonstrate which type of pulpal configuration?** *(COMEDK 10)*

**Ans.** a DOUBLE root with 2 root canals

## ENDODONTIC MICROBIOLOGY

- Sample of root canal taken by sterile adsorbent paper points *(KCET 06)*
- FISH ZONE:

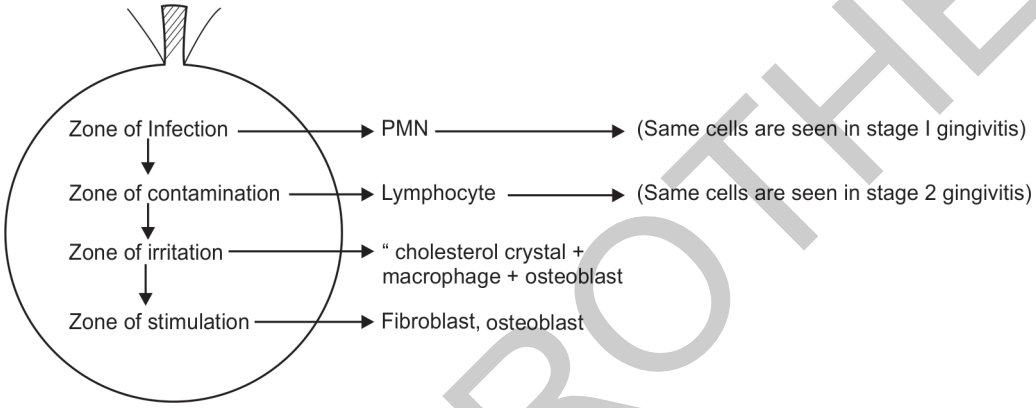


**Fig. 4.2:** TRICK = "ICI" CI Bank

CHOLESTROL crystals are occasionally present in zone of IRRITATION (COMEDK 07). This zone also has MACROPHAGES and OSTEOCLASTS *(KCET 06)*

- Important cytokinins in apical periodontitis:

IL–1 (mainly) [Q] + TNF–α

- "Micro organism will always be isolated from periapical lesion" (WRONG statement) → NOT always
- Peripical granuloma → NOT sterile → mixed infection seen (SHAFER)
- ROOT canal and various micro–organisms:

Organism ABSENT in root canal → Pseudomonas

Most common organism isolated from root canal
↓
S. viridians (NOT pyogens)/α - streptococci
and staphylococcus

- Pathogenicity of endodontic flora:
- As gram negative flora dominates. So, endotoxin plays an important role. No role of exotoxin (AIPG)
- Biofilm:

One of the basic mechanisms of survival of bacteria in time of starvation.

E. faecalis produces intracanal microbial BIOFILM

It Can tolerate a Ph up to 11.5 *(KCET 10)*

Normally it is resistant to $Ca(OH)_2$. So, combinations are used

JAYPEE BROTHERS

- The strain of yeast found in root canal: C. albicans [Q]

| |
|---|
| In RCT, Failure is caused by E. faeclis *(AIIMS 08, AIPG 07)* |
| Flare up is caused by bacteriods |

- Viruses isolated from root canal:

| |
|---|
| {TRICK = these viruses are seen with lowered number of T–CELLS} |
| CMV, EBV, HIV |

## LAST 5-YEAR QUESTIONS FROM THIS TOPIC

**1. Which of the following is not a major component of endodontic pathogenic mechanism?** *(AIPG 10)*

**Ans.** Exotoxin (Ref: Cohen 8/e p464)

## DISEASES OF PULP AND PERIRADICULAR TISSUES THEIR DIAGNOSIS AND TREATMENT PLAN

- The diagnosis of pulpal disease is obvious but is sometimes obscure
- Cold test is used to indicate vital pulp
- Heat test is not meant to test pulp vitality
- Thermal test:

| |
|---|
| Heat test → 65.5°C |
| Cold test → 5°C |

- EPT: *(AIIMS 06)*

| |
|---|
| Can be normal in degenerative pulp |
| It is more sensitive for pulp tissue than gingival tissues |
| It brings about response by stimulating nerve endings |
| • **Note:** Vitality should be rechecked after 2 weeks and then 1 month |
| For PFM → EPT is contraindicated, instead cold test With CO2 snow/"TRIGIDENT "is test of Choice. (Temperature of dry ice/CO2 snow is–78ºC) {COMEDK 08} |
| POSTERIORS require more current for EPT due to bulkier tooth |
| False negative response to EPT is seen in:<br>• Recently traumatized tooth<br>• Recently erupted tooth with incomplete root formation<br>• Patient under sedative drugs |

- Percussion test:

| |
|---|
| PERCUSSION test → is the test of INTEGRITY of Pdl *(PGI 05)* |
| CONCEPT: "percussion" tells about the status of the "periodontium" surrounding the tooth. NOT about whether tooth is vital/not<br>Pulpal inflammation may/may not be present. |
| The diseased tooth is examined last in percussion. |
| POSITIVE vertical percussion ——— endodontic lesion |
| POSITIVE Lateral percussion ——— periodontal lesion *(PGI 08)* |

- Cyst differentiated from granuloma by injecting Poly Acrylamide dye [Q]

JAYPEE BROTHERS

- Endoray:
  - Film holder to position film for projecting X–ray in endodontic procedure.
- Snap-a-ray film holder ideally sterilized by autoclave *(KCET 12)*
- Digital imaging (commercially available):

| |
|---|
| • RVG |
| • Flash dent |
| • Sense-a–ray |

- Radiographically the latent period of an acute periapical abscess is 10–15 days *(AIIMS 05)*
- Radiopaque irregularity associated with root of tooth indicates subgingival calculus *(PGI 07)*
- GCF: can be either exudates/transudate. But if both options are not given then go for " exudate"
- Transudαte: Specific gravity < 1.012 *(KCET 12)*
- DNA micro processing uses DNA computer
- Acute closed pulpitis:

| |
|---|
| Is the most intense pulpal pain |
| It is so severe because pulp is bound by RIGID dentine *(COMEDK 05)* |

- Concept: Diseases of pulp:

| | |
|---|---|
| HYPEREMIA of pulp/focal reversible pulpitis: tooth is more sensitive to thermal and electrical test. pain is INTERMITTENT<br>• CHRONIC pulpitis: the pulpal response to thermal and electric stimuli is " REDUCED"<br>• ACUTE apical periodontitis: shows MARKED tenderness to percussion(PATHOGNOMIC), negative EPT (features similar to periapical abscess)<br>• Chronic apical periodontitis (periapical granuloma): very mild tenderness to percussion. so, it's NOT the pathognomic sign | |
| IRREVERSIBLE PULPITIS *(PGI 05)* | REVERSIBLE PULPITIS/hyperemia/focal reversible pulpitis |
| Prolonged, severe pain (THROMBING) referred pain is common pain is intermittent/continuous BUT spontaneous. pain often continues when cause is removed pain may be caused by sudden temperature change especially COLD | No referred pain |
| Tenderness on percussion seen *(PGI June 10)* | Tenderness on percussion absent |
| Postural pain seen | NO postural pain |
| PULP TESTS:<br>EPT–normal to elevated<br>HEAT test–acute pain<br>COLD test–pain relieved by cold sometimes | PULP test:<br>EPT–normal<br>HEAT–normal to exaggerated<br>COLD–exaggerated |
| Acute pulpal degeneration = irreversible pulpitis<br>So, most definitive sign of diagnosis patient history of unprovoked spontαneous pain *(AIIMS 05)*<br>Treatment of choice is pulpectomy *(COMEDK 11)* | |

- Internal resorption/odontoclastoma:

| |
|---|
| Result of odontoclastic activity |
| Result of odontoclastic activity |
| Usually ASYMPTOMATIC *(COMEDK 10)* |
| H/P: Granulation tissue with multinucleated giant cell (OSTEOCLAST) [Q] (like other inflammatory resorption)<br>The presence of granulation tissue accounts for profuse bleeding when pulp is removed<br>At least part of pulp must be vital for resorption to take place. Commonly coronal pulp is necrotic and apical 3rd vital. |

JAYPEE BROTHERS

| |
|---|
| NO chance of internal resorption after successful RCT as pulp is removed |
| Rx of INTERNAL resorption: PULPECTOMY should be done + Ca $(OH)_2$ dressing. |
| {NOTE: osteoclastoma = central giant cell granuloma} |

- According to INGLE usual percentage of success in endodontic cases is 90–95%
- If RCT is performed on vital pulp, prognosis will be better than necrotic pulp
- Pulpal fibrosis: does not require any Rx till it becomes symptomatic (as fibrosis itself is a protective response)
- Rx of barodontologia
- Restore the cavity with varnish/sub base of ZnOE and base of $ZnPO_4$
- Rx for pulp polyp → extraction/endodontic therapy
- Prognosis of external root resorption vs internal root resorption:

| EXTERNAL root resorption | INTERNAL root resorption |
|---|---|
| Prognosis is guarded (NOT good) and tooth becomes weak and even lost | Prognosis best before perforation |

- Cracked tooth syndrome:

| | |
|---|---|
| Mimics the STABBING pain seen in TRIGEMINAL NEURALGIA | *(COMEDK 12, 08)* |
| Elicited mainly when pressure is RELIEVED | *(COMEDK 05)* |
| URGENT treatment → selective grinding of opposing cusp (relieve occlusion) | *(COMEDK 13)* |
| DEFINITIVE treatment → FULL coverage crown | |

- Phoenix abscess has symptoms similar to that of an acute infection. It is associated with a non vital tooth, has periapical radiolucency and is tender on percussion *(AIIMS 06)*
- Trephination: [Q]

  It is artificial sinus made in bone, a procedure to relieve pain.

  This is done by perforating cortical bone by engine driven burs/hand operated trephine to release the building pressure and exudates around root apex of a tooth.

  Time needed for osteogenesis in case of periapical lesion is 6–12 months

  Austin syndrome: pain in TMJ + headache.

## LAST 5-YEAR QUESTIONS FROM THIS TOPIC

1. **A tooth tested non vital in vitality test showing periapical radiolucency shows the presence of sinus tract clinically. What should be the treatment for sinus tract?** *(AIIMS May 11)*

**Ans.** No treatment (Ref: Goldberg, et al. Odontogenic sinus tracts, Quintessence international, 2009, 40 p13–18)

2. **A radicular cyst is always associated with:** *(AIIMS Nov 10, May 09)*

**Ans.** Non vital tooth/teeth (Ref: Q 76 NDBE dec 1977 endodontology and periodontology)

3. **What is the term for radio opaque area found at the root apex of a young permanent tooth involved with a chronic pulpitis?** *(AIIMS Nov 10, AIPG 11)*

**Ans.** Apical condensing osteitis (Ref: Q- 89 NDBE 1978 endodontology and periodontology)

4. **A patient has an infectious process associated with the maxillary right lateral incisor. The tooth is deeply carious and non-restorable. His temperature is 102 °F. The patient has not been able to chew for the past 24 hours from the right side of the face. The treatment of choice would be:** *(AIIMS Nov 11, 08)*

**Ans.** Incision and drainage

5. **Pulp vitality tests usually used to check?** *(PGI Dec 10, June 08)*

**Ans.** Afferent nerve fibers (Ref: Walton and torabinejad p57)

{Trick: Vitality has "A" so, it's Afferent nerve}

JAYPEE BROTHERS

6. **ALL of the following tests are used to determine the status of the pulp except:** *(KCET 11)*
   a. Heat test
   b. Cold test
   c. Electric test
   d. Anesthetic test

**Ans.** d (Ref: Grossman's endodontic practice 12/e p70)

7. **Application of COLD/the electric pulp tester can be used:** *(KCET 10)*

**Ans.** To test tooth under treatment for pulpal anesthesia

8. **A pulp vitality test which uses the principle of measuring the velocity of RBC in capillaries:** *(KCET 12)*

**Ans.** Laser Doppler flowmetry

9. **Pulp oximetry is used to measure:** *(PGI June 12)*

**Ans.** Oxygen saturation

10. **HOT tooth refers to:** *(PGI June 12)*

**Ans.** Tooth which cannot be anaesthetized

## ENDODONTIC TREATMENT OF PRIMARY AND YOUNG PERMANENT TEETH

- Direct pulp capping and Ca $(OH)_2$ pulpotomy are contra indicated in primary tooth
- Ledermix:

| |
|---|
| Has Demeclocycline (AIIMS may 09) + Prednisolone + Triamcelanone in Ca $(OH)_2$ (TRICK: DPT-C) |
| It's a DIRECT pulp capping agent with corticosteroids and antibiotics. It reduces pulpal inflammation |

- Pulpotomy is contraindicated in case of: *(AIIMS 05)*

| |
|---|
| Mobility |
| Pain on percussion |
| Periodontitis involving pulp |

- Pulpotomy:

| |
|---|
| In SWEET technique of devitalisation pulpotomy FORMOCRESOL saturated cotton pellet is placed over the amputated pulp stumps for 5 minutes *(COMEDK 05)* |
| BUCKLEY's solution used in devitalisation pulpotomy is composed of cresol, formaldehyde, water and glycerin *(AIIMS 06)* |
| FERRIC sulfate pulpotomy:<br>Ferric sulfate = MONSEL's solution<br>Done for 10–15 sec [Q]<br>It is a type of preservative pulpotomy<br>Also used as haemostatic agent [Q]<br>CVEK's PULPOTOMY/PARTIL pulpotomy:<br>Done in young permanent tooth (for completion of root development) |

- Apexification:

| |
|---|
| Ca $(OH)_2$ → fill the entire canal (time taken for apexification is 6 to 24 months) |
| MTA → Composition: tricalcium silicate, dicalcium silicate, Tricalcium aluminate, CaSO4 dihydrate Bismuth oxide used in pulpotomy, DPC, APPEXIFICATION immature teeth (PGI 06, KCET 08 Q), in case OF PERFORATION of tooth it's a root end filling material (KCET 08) NOT root canal filling material (PGI 09) Fill in apical 3 to 4 mm (single step procedure) Obturate with thermoplastic GP technique Powder: liquid ratio = 3 : 1 (AIPG 11) (same ratio for PMMA volume wise) Ph of set MTA is 12.5 (AIPG 10) |

JAYPEE BROTHERS

| |
|---|
| Mechanism of action of MTA:<br>1. Induces expression of OCN (osteocalcin gene)<br>2. Induces cementoblast to form hard tissue |

## LAST 5-YEAR QUESTIONS FROM THIS TOPIC

**1. The type of laser used in pulpotomy procedure is:** *(COMEDK 10)*

**Ans.** Nd: Yag laser (according to the official key given)

**2. High rate of failure after direct pulp capping in primary teeth is due to:** *(KCET 12)*

**Ans.** High cellular content of pulp

## BIOMECHANICAL PREPARATION OF CANAL, DISINFECTION AND OBTURATION (VERY IMPORTANT TOPIC FOR ANY EXAM)

- GLASS bead sterilizer:

| |
|---|
| Used at 425 ºF for 15 sec<br>(Range is 425 ºF–475 ºF) *(KCET 08)* |
| ABSORBENT paper point is sterilized by glass bead sterilizer |
| HOT salt sterilizer used at 425 ºF for 10 sec |
| Hottest part is present on periphery while lowest temperature is at center |
| To sterilize immerse at least 14 inch below salt |
| Main disadvantage of glass bead sterilizer is that ONLY small instruments can be sterilized |

- Access cavity:

| |
|---|
| Maxillary molar triangular shaped access cavity |
| Mandibular molar with 3 root canal trapezoidal access cavity |
| Mandibular molar with 4 root canal rectangular access cavity *(AIIMS May 11, 08)* |
| 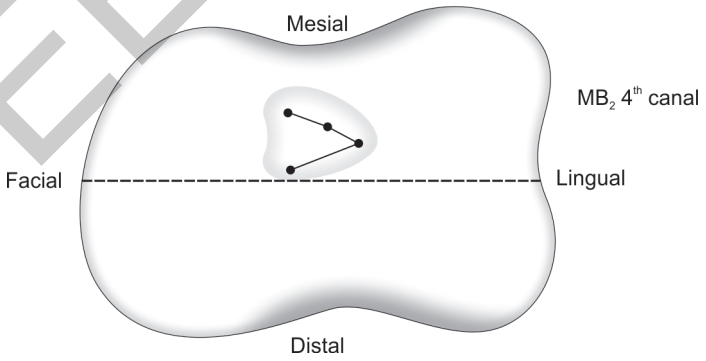<br>**Fig. 4.3:** Access cavity |
| CONCEPT: Access opening in both upper and lower molar are always on mesial half of occlusal surface. |
| Perforation with bur is common in mandibular central incisor > mandibular premolar |
| In creating access opening through a PFM crown diamond is used for ceramic while carbide is used for metal *(AIPG 07)* |

JAYPEE BROTHERS

- Exploration of canal orifice of Mandibular 1st molar:

| |
|---|
| MB orifice present under MB cusp and is explored from MB cusp side (SAME side) |
| ML orifice is present below the central groove and is explored from DB direction (OPPOSITE side) |
| The DISTAL orifice is explored from MESIAL side (OPPOSITE side) |

- Standardization of instrument:

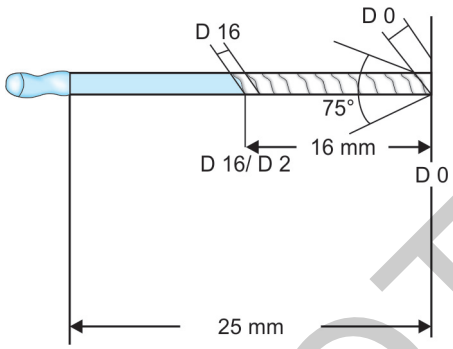


**Fig. 4.4:** Standardization of instrument

| |
|---|
| According to ISO standardization files and reamers should have a taper of 0.02 mm/mm *(KCET 08, 05)* |
| Instrument numbered from 1 to 100<br>1. Each number denotes tip diameter in hundredths of mm<br>2. $D_0 = D_1$ = diameter at tip<br>3. $D_{16} = D_2$ = diameter at 16 mm from the tip of the instrument (KCET 12, 11) |
| Tip angle of an endodontic instrument should be 75 50 *(KCET 06, COMEDK 12)* |
| Handle of instrument has color coding:<br>Pink → 6<br>Grey → 8<br>Purple → 10<br>White → W → 15<br>Yellow → Y → 20<br>Red → R → 25<br>Blue → B → 30 *(PGI 06)*<br>Green → G → 35<br>Black → B → 40<br>Repeat again from W, Y ,R, B, G, B 45, 50 ,55, 60 (PGI 06), 65, 70 |

- To locate canal orifice DG–16 endodontic explorer used
  In calcified canal SHARP explorer with EDTA used
- Endodontic instruments should be used with ¼ th to ½ turn and withdrawn with a pull stroke to prevent fracture (1/3rd turn was the answer in NEET 13.
  It was a direct from a Q bank)
- Case:
  When a calcified canal cannot be located/instrumented then the dentist must proceed with the understanding that an unexplored/unfilled canal is worse than a perforation *(KCET 06)*

JAYPEE BROTHERS

- Reamers and files:

**CONCEPT:**
With respect to difference between REAMER and FILES
Most of the companies make reamers and files with same blank. They are mainly different with respect to number of flutes. *(AIIMS 06)*

**NOTE:** blank determines cutting efficiency and fracture resistance

**No. of flutes:**
1. In files–1 1⁄2 to 2 1⁄2 flutes/mm
2. In reamers - 1⁄2 to 1 1⁄2 flutes/mm

**Cutting actions of:**
1. Reamers–they are twisted 1⁄4 to 1⁄2 turn
2. Files–they are withdrawn without any turning

The IDEAL instrument that is used to widen the canal is FILE (as less likely to break than reamer)

Instrument for cutting dentine EFFICIENTLY REAMER

More chances of "debris" to be pushed is "FILES" [Q]

RASP = RAT tail file

REAMERS used in PUSHING–rotating motion
FILES used with RASPING/PULLING motion

K–file: called work horse of endodontic

**MODIFICATIONS of K- file**

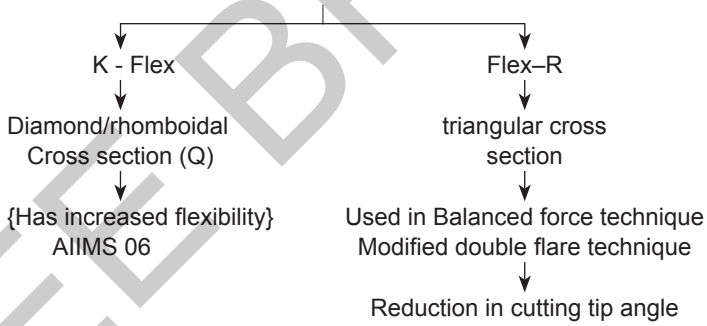


- H-file:

H-File has SPIRAL flutes, positive rake angle with 60º - 65º. So, they are aggressive cutters, but there are greater chances of fracture. (AIIMS Nov 11, KCET 08) so, can't be used in curved canal.

H–File has "TEAR DROP" single helix, Christmas tree appearance.

Clinician should use H- file only in 1 direction i.e. PULLING and never in TORQUING motion. *(AIIMS 05)*

It is used to FLARE the canal *(PGI 05, COMEDK 05, KCET 09)*

Modifications of H–file: *(COMEDK 12)*
Safety H–file–has non cutting side
Hyflex–S shaped design
Unifiles–double helix design
S–File–double helix design

JAYPEE BROTHERS

- Group 2 non–rotatory endodontic instruments used with HAND piece:

| ENGINE DRIVEN | ULTRASONIC and SONIC |
|---|---|
| Giromatic<br>Uses K Files/reamers in root canal with 90º reciprocating arch with a speed of 3000 cycles/min | Produces movement of K file between 0.001 to 0.004 inch at a frequency of 25 to 30 KHz<br>No. 15, 20 K file used *(PGI 12)* |
| Can be used for canal opening but shouldn't be used for canal preparation. | Along with cutting it improves mechanical, thermal, bactericidal and cleansing ability of irrigant solution (by cavitation and acoustic streaming) [Q] |

- Group 3 rotatory endodontic instrument used with hand piece:

SLOW speed rotator hand piece instrument:
E.g. GG drill/peso reamer → set of 6
GG drill → 0.5 to 1.5 (tip diameter)
Pesoreamer → 0.7 to 1.7 (tip diameter)
BOTH GG drill and peaso reamer are made of carbon steel, so aggressive cutter BUT inflexible. So, used in SLOW SPEED.

| NUMBER of instrument | GG DRILL (KCET 07) (tip diameter) | PEASO REAMER (tip diameter) |
|---|---|---|
| 1 | 0.5 (+0.2 → 0.7; ↓ + 0.2) | 0.7 |
| 2 | 0.7 | 0.9 |
| 3 | 0.9 | 1.1 |
| 4 | 1.1 | 1.3 |
| 5 | 1.3 | 1.5 |
| 6 | 1.5 | 1.7 |

PEASO REAMER is used for post space preparation *(COMEDK 06, KCET 11, 12, AIPG 12 ,07)*

GG drill used to remove lingual shoulder

- Ni–Ti instrument:

Are flexible because of their super elasticity *(COMEDK 09)*

Can be used in PURE ROTATION motion in curved canal

Disadvantage: no VISUAL indication of fracture

Tapered instrument → they have same diameter at tip. Instrument are developed with a taper of 2%, 4%, 6 %

2% taper = diameter increases by 0.02 mm/mm
So, 4% taper = diameter increasing by 0.04 mm/mm

Advantage: preparing canals of wider diameter without enlarging the canal at working length.

LAND area of certain files: this feature is incorporated to reduce canal transportation and support cutting edge.

- NiTi Vs stainless steel:

Q–Advantage of NiTi over stainless steel in endodontic: it's SUPERELASTICITY *(PGI June 12)*
Rotatory stainless endodontic instrument fracture when cyclic loading leads to metal fatigue.

NiTi instrument can withstand several hundred flexural cycles before fracture in endodontic setting but at higher number of cyclic loading

JAYPEE BROTHERS

- Canal exploration:

| |
|---|
| Canal exploration: 8, 10 K file used |
| In calcified canal–6 K file, C+ file, profinder |

- Electronic apex locator:

| |
|---|
| Electronic apex locator is used in endodontics to determine the working length *(COMEDK 10)* |
| High accuracy, powerful and useful adjunct to radiograph but NOT an alternative. |
| Classification: (remember the one asked in exams)<br>Multiple frequency apex locator (3rd generation) e.g. root ZX (AIIMS 04), TriAuto ZX, Propex 2 |

- Wein modifiction of working length determination by radiograph:

| |
|---|
| 1. Reduce length by 1 mm if NO root + bone resorption |
| 2. Reduce length by 1.5 mm if bone resorption |
| 3. Reduce length by 2 mm if both root and bone resorption |

- Balanced force technique:

| |
|---|
| Uses Flex–R file (with triangular blank) |
| Technique: 1st engage the canal by clockwise 90° direction with LIGHT apical pressure.<br>Then instrument is rotated COUNTER clockwise 180° - 270° with SUFFICIENT apical pressure. |

- Crown-down technique/step back = telescoping technique: *(COMEDK 09)*

| |
|---|
| Coronal 2/3rd preparation with 15, 20, 25 H file GG drill to flare<br>Apical segment preparation with 10, 15 no. file coronal segment<br>Advantages: ZIPPING is less, working length less likely to change, better penetration of irrigant. |

- Zipping:

| |
|---|
| Transportation of apical portion of canal |
| Lesser seen with crown down technique |

- Double flare technique (by both crown down and step back):

| |
|---|
| K file used |
| Meant for straight canal |

- Modified double flare technique:

| |
|---|
| Meant for curved canal [Q] |
| Flex–R file used |

- Mesio buccal root in maxillary molar is most difficult to prepare as has greatest distal curvature and narrowest of all
- In BMP final "2–3 mm" apical part of cavity preparation is most crucial. This is a region where leakage of sealing agent occurs and this is the region where accessory canals are most commonly present *(PGI Q)*

JAYPEE BROTHERS

for detailed information on dental books, visit our website **www.jaypeebrothers.com,** for detail

# SMART DENTAL REVISION

***Salient Features***

- Explanation of important concepts in a simple way
- Includes certain tricks to remember the important forgettable points
- Difficult points are in diagrammatic/tabular/flow chart format as it becomes easy to learn
- Full of competitive concepts and less of basics.

**Suraj Kumar** MDS (Postgraduate Resident) has graduated from prestigious Manipal University, Manipal and has cleared many postgraduate entrance examinations (MDS entrance) like AIPG, BHU, PGI Chandigarh, Karnataka CET, COMEDK etc. At present, he is working as Postgraduate Resident in SGR College, Rajiv Gandhi University of Health Sciences, Karnataka.



**Available at all medical bookstores**
**or buy online at www.jaypeebrothers.com**

JAYPEE BROTHERS
Medical Publishers (P) Ltd.
www.jaypeebrothers.com

Join us on facebook.com/JaypeeMedicalPublishers

Shelving
Recommendation
**DENTISTRY**

ISBN 978-93-5152-674-2

9 789351 526742