detailed information on surgery books, visit our website **www.jaypeebrothers.com,** for detailed information on surgery book, visit our website **www.jaypeebrothers.com**

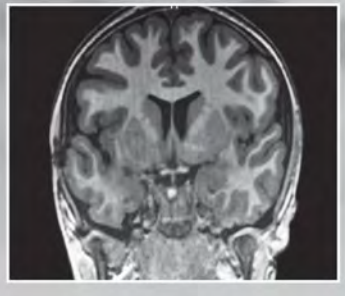
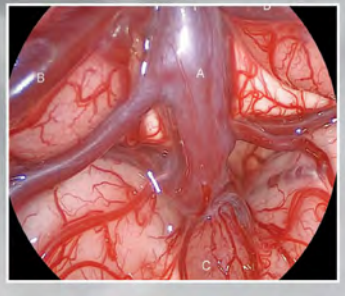


Endoscopic Neurological Surgery

David F Jimenez

JAYPEE

Contents

1. History of Neuroendoscopy 1

David N Garza, David F Jimenez

- Endoscopic Prehistory *1*
- The First Endoscopes *2*
- Nitze and the Modern Endoscope *3*
- Neuroendoscopy Emerges *3*
- The Dandy Years *4*
- The Decline and Rebirth of Neuroendoscopy *5*
- Fiber Optics *5*
- Rod-Lens System *5*
- Selfoc Lens *5*
- Charged-Coupling Devices *6*
- Neuroendoscopy: Yesterday, Today, and Tomorrow *6*

2. Endoscopic Ventricular Anatomy 8

David F Jimenez

- Ventricular System *8*
- Frontal Horn *8*
- Anterior Third Ventricle *8*
- Posterior Third Ventricle *10*
- Body of Lateral Ventricle *12*
- Occipital Horn and Trigone *13*
- Temporal Horn *13*
- Fourth Ventricle *14*

3. Endoscopes and Instrumentation 16

David F Jimenez

- Optics *16*
- Endoscopes *16*
- Endoscope Holders *20*
- Endoscopic Instruments *21*
- Electrodes *22*

4. Approaches to the Ventricular System 26

David F Jimenez

- General Principles *26*
- Frontal Horn Access *27*
- Posterior Third Ventricular Access *29*
- Anterior Third Ventricular Access 30
- Occipital Horn Access 31
- Fourth Ventricular/Cerebellar Access *32*
- Temporal Horn Access *33*

5. Third Ventriculostomy 34
David F Jimenez, David N Garza
- Pathology and Classification of Hydrocephalus *34*
- History of Endoscopic Third Ventriculostomy *35*
- Etiologies of Hydrocephalus and Associated Endoscopic Third Ventriculostomy Efficacy *36*
- Endoscopic Third Ventriculostomy and Shunt Implantation *37*
- Factors Affecting Endoscopic Third Ventriculostomy Patient Outcomes *38*
- Endoscopic Third Ventriculostomy and Choroid Plexus Cauterization *38*
- Surgical Procedure *40*
- Complications *45*

6. Endoscopic Treatment of Symptomatic Midline Cavum Septum Pellucidum Cysts 49
David F Jimenez, David N Garza
- Treatment *51*
- Clinical Presentation *53*
- Technique *54*
- Clinical Cases *56*

7. Arachnoid Cysts 60
David F Jimenez, Kevin R Carr
- Background *60*
- Cyst Location *60*
- Treatment Options *62*
- Surgical Procedure *62*
- Middle Fossa Cysts *62*
- Supratentorial and Convexity Arachnoid Cysts *66*
- Deep Cerebral and Infratentorial Arachnoid Cysts *67*
- Clinical Case: Middle Fossa *67*

8. Endoscopic Management of Frontal Epidural Lesions 73
David F Jimenez
- Positioning *73*
- Incision *73*
- Cranial Access *73*
- Procedure *73*
- Clinical Cases *75*

9. Endoscopic Resection of Colloid Cysts 79
David F Jimenez, David N Garza
- Access Point *81*
- Positioning *81*
- Incision and Entry *82*
- Clinical Cases *85*
- Discussion *87*

10. Multiloculated Hydrocephalus 90
David F Jimenez, David N Garza
- Clinical Presentation *92*

- Treatment *93*
- Clinical Case 1 *97*
- Clinical Case 2 *100*

11. Endoscopic Neuronavigation and Image Guidance 103
David F Jimenez, Colin T Son
- Principles of Intraoperative Image-guided Navigation *103*
- Technical Details of Intraoperative Image-guided Navigation in Neuroendoscopy *103*
- Future of Intraoperative Image-guided Navigation in Neuroendoscopy *111*

12. Endoscopic Tumor Biopsy and Resection 113
David F Jimenez, David N Garza
- General Concepts *113*
- Pineal Region Tumors *114*
- Patient Selection Criteria *115*
- Diagnostic Yield and Efficacy *115*
- Clinical Cases *116*
- Complications and Recommendations *125*

13. Endoscopic Microvascular Decompression 128
David F Jimenez, David N Garza
- Literature Review *129*
- Clinical Presentation *131*
- Surgical Procedure *132*
- Clinical Cases *135*
- Closure *137*
- Complications *137*

14. Endoscopic Carpal Tunnel Release 140
David F Jimenez, Michael J McGinity
- Patient Selection *140*
- Preoperative Preparation *140*
- Operative Procedure *141*
- Postoperative Management, including Possible Complications *147*

15. Intraventricular Cysts 149
David F Jimenez, David N Garza
- Choroid Plexus Cysts *150*
- Ependymal Cysts *152*
- Regarding Intraventricular Arachnoid Cysts and Their Classification *153*
- Clinical Cases *153*

16. Risks and Complications 164
David N Garza, David F Jimenez
- General Concepts *164*
- Endoscopic Third Ventriculostomy *165*
- Cysts, Tumor Biopsy, and Microvascular Decompression *166*

Index 169

CHAPTER 3

Endoscopes and Instrumentation

David F Jimenez

INTRODUCTION

The unique nature of the human central system, in terms of anatomical arrangement and complex relationships, requires delicate and individual approaches. Such structural arrangement presents limitations not encountered in other body cavities. To access the ventricular system or other deep cerebral structures requires specialized instrumentation. Although not fully versatile, currently available instrumentation has undergone important recent modifications. Presented in this chapter is an overview of presently available endoscopes and instrumentation used for neuroendoscopic surgery.

OPTICS

Major advancements in optics and scope design have taken since Maximilian Nitze introduced the first lens endoscope in 1877. Nowadays, the rod lens systems of rigid endoscopes, coupled with high definition cameras and monitors, provide the surgeon with superb visualization of the ventricular system. Endoscopic systems are primarily of two types: (1) The rod lens system provides higher resolution imaging with the larger endoscopes providing better images and (2) the other systems are the flexible, fiberoptic scopes, which provide greater maneuverability and flexibility in handling to the sacrifice in resolution. Due to the physical arrangement of the fibers, a significant amount of light is lost, leading to poorer resolution. Additionally, although the fibers can bend, they can also break leading to further image degradation and loss of pixels.

ENDOSCOPES

Endoscopes are produced in many sizes and configurations. Some are made of glass and others from fiberoptic silica glass fibers. Rigid scopes are constructed with solid glass and are therefore nonflexible, nonsteerable and non-bendable. Flexible scopes, on the other hand, are steerable, flexible, and maneuverable. The question always arises as to which one is better. Selection of the appropriate endoscope is dependent on procedure type and need. One is not necessarily better than another, depending on the situation and surgeon's preference.

Rigid Endoscopes

The construction of rigid endoscopes may be done in two primary ways: A rod of solid glass or a group of small rod glass units separated with air between the lenses. The latter became the method of choice for mass manufacturing of rigid endoscopes in the 1940s and 1950s. In 1959 Professor Harold H Hopkins, of the University of Reading, designed and patented an elegant solution to the poor resolution of the existing scopes. He reduced the amount of air space between the small rod lenses by exchanging the air for more glass, thus making the lenses longer and mirroring the effect of the air spaces (Figs. 1A and B). Hopkins endoscopes produced higher resolution and greater depth of focus by cutting the tip of the endoscope, the angle of view could be changed from 0° to 30°, 70°, and even 120°. Additionally, by increasing the amount of glass within the endoscopes, Hopkins achieved a significant increase in light transmission due to the higher refractive index of glass versus air. (Refractive index of

JAYPEE BROTHERS

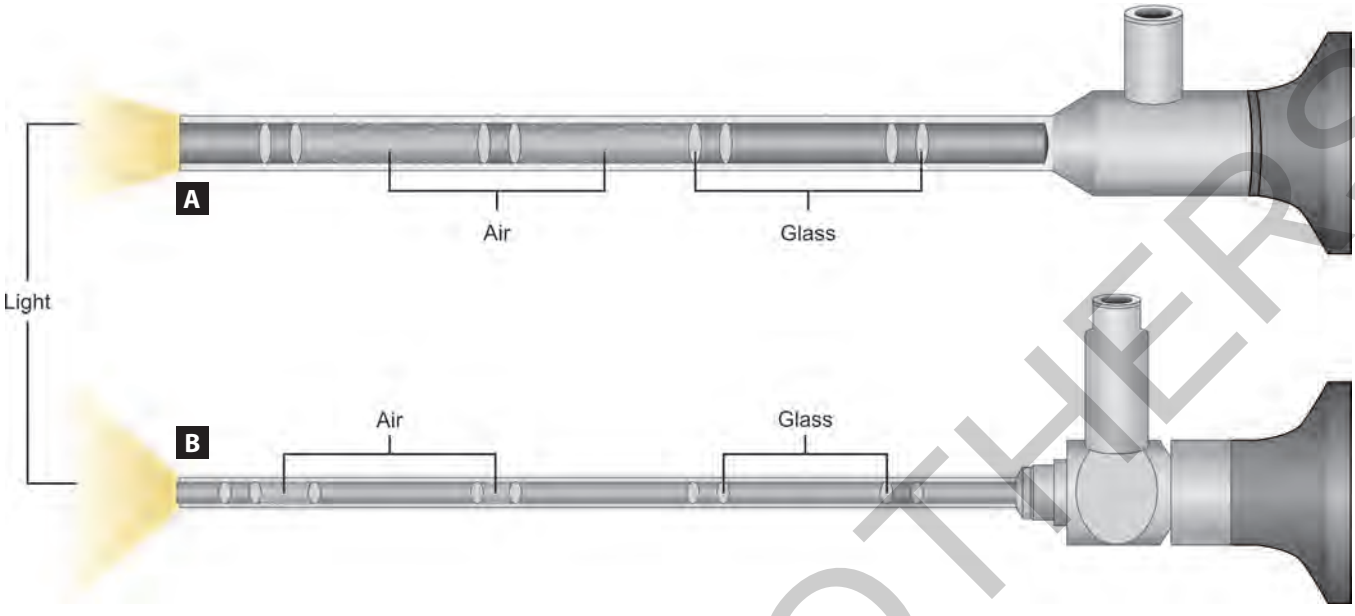

Figs. 1A and B: Schematic diagrams of a typical rigid rod lens endoscope. (A) The original Nitze's endoscope with small rod glass lenses interspaced with larger areas of air spaces. (B) Hopkins' modification of enlarging the glass rods and decreasing the air spaces in between. This led to smaller scopes producing greater illumination.

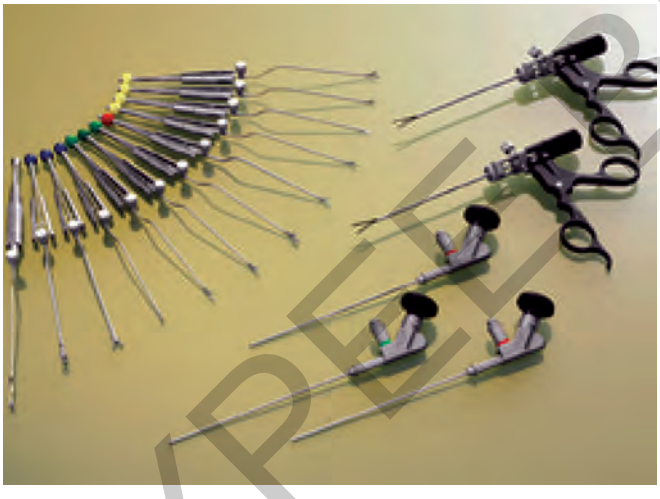

Fig. 2: The rigid endoscope GAAB system showing different angled endoscopes and instrumentation used with the system to perform neuroendoscopic procedures.
Source: Courtesy of Karl Storz Co.

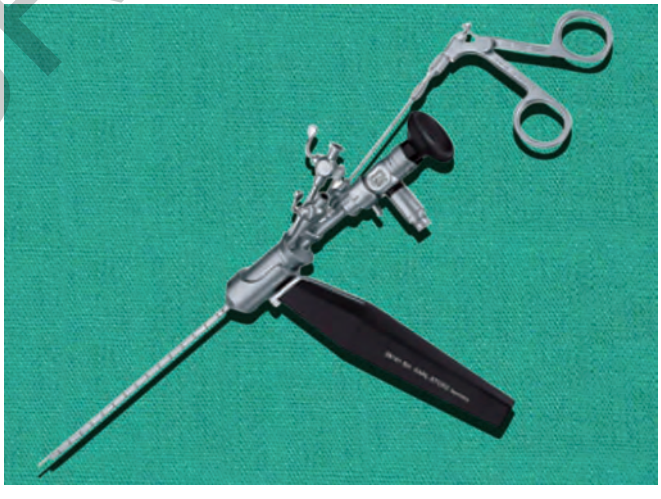

Fig. 3: The Oi HandyPro Endoscope. This versatile scope has a smaller working diameter and is easier to manipulate into smaller compartments or through a narrow foramen of Monro. It has three working parts.
Source: Courtesy of Karl Storz Co.

1.5 vs 1.0). Transmission of light is 50% better through glass than through air.

Karl Storz began producing endoscopes for otolaryngologists in Germany in 1945 and has since then expanded to many other surgical fields. Currently, there are a number of endoscope manufacturers who produce a large array of endoscopic systems. Storz (Karl Storz, GmbH and Co, KG, Tuttlingen, Germany) perhaps produces the largest variety of endoscopic systems. These include the DECQ, GAAB (Fig. 2), Schroeder, Genitori, Oi HandyPro (Fig. 3), LOTTA (Fig. 4), Frazee, Galzio, Mortini, systems

JAYPEE BROTHERS

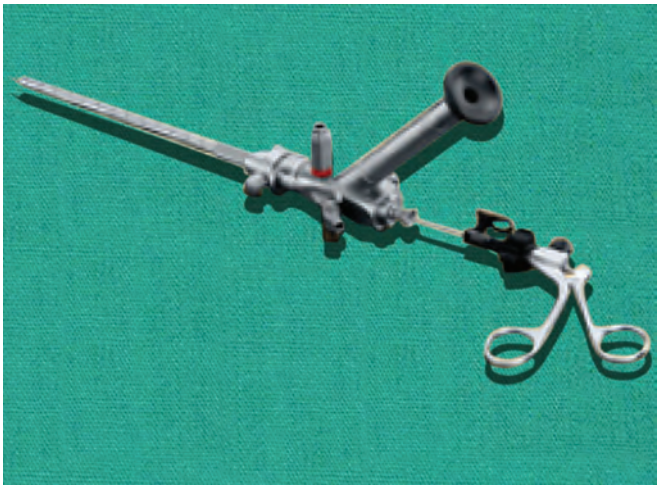

Fig. 4: The LOTTA endoscope is another useful and versatile system which has excellent optics and multiple working channels. *Source*: Courtesy of Karl Storz Co.

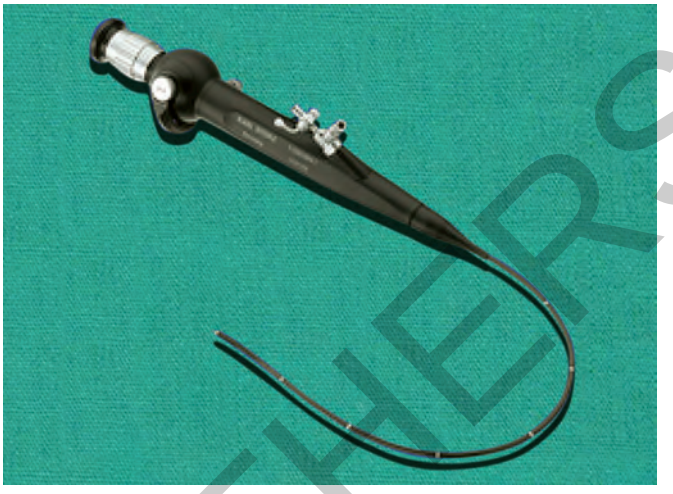

Fig. 5: Storz flexible endoscope has 360° freedom of movement when properly manipulated with both hands. It only has a single working port/channel.
Source: Courtesy of Karl Storz Co.

among others. Other manufacturers include Olympus, Codman, and Medtronic among others.

Flexible Endoscopes

These endoscopic systems are constructed of flexible silica glass and a distal objective lens packaged with multiple light fibers. As such, these endoscopes are flexible and bendable. The image fibers are arranged in a coherent bendable which allows the image to be properly reconstructed on the proximal end of the fiber. The flexible endoscope transmits light across the flexible silica glass fibers. These fibers are coated with a cladding material that has low refractive index. As the light passes from a material of higher refractive index (silica glass) to one of lower refractive index (cladding material), the light encounters optical interference, and as such, degrades by approximately 30%. This of course leads to lower illumination and resolution as a compromise for flexibility. The larger the flexible scope, the better the illumination and resolution (as in those used by pulmonologists and gastroenterologists). However, due to the size and highly delicate architecture of the brain, neurosurgeons utilize smaller endoscopes, which produced degraded images. As with rigid scopes, several companies produce these scopes. The typical neuroendoscope has a diameter between 2.8 mm and 4 mm and carries a single working channel and working lengths of 34–40 cm and total lengths between 64 cm and 70 cm. Working channel diameter vary between 1.2 mm and 1.5 mm. The tip of these endoscopes can be flexed anywhere between 120° and 170° (Fig. 5).

Disposable Endoscope

In the late 1990s, technology advanced to the point where small, fiberoptic disposable endoscopes were first introduced by the Claris Corporation. Currently Medtronic (Minneapolis, MN) produces a group of disposable endoscopes that provide the neurosurgeon with improved access and flexibility. The NeuroPEN endoscope is ideal for placing ventricular catheters in the desired location and under direct visualization. The outer diameter (OD) is 1.14 mm and the endoscope fits inside the ventricular catheter. The tip of the ventricular catheter can be cut to provide a slit opening (there are catheters available with manufactured slit tips) (Figs. 6A and B) through which the endoscope can be advanced and the catheter can be placed in the desired location (Fig. 7). Additionally, this endoscope has an irrigation port which provides for clearing of any debris and improves visualization. Another flexible and disposable endoscope is the Murphy Scope (Fig. 8) of slightly larger OD (2.3 mm) the endoscope has a flexible metal housing which can be manipulated and bent in any desired shape to reach tight spaces. I have used this scope inside the spinal cord when treated multi-loculated or septated syringomyelia with great success. It also has an irrigating port which allows for

JAYPEE BROTHERS

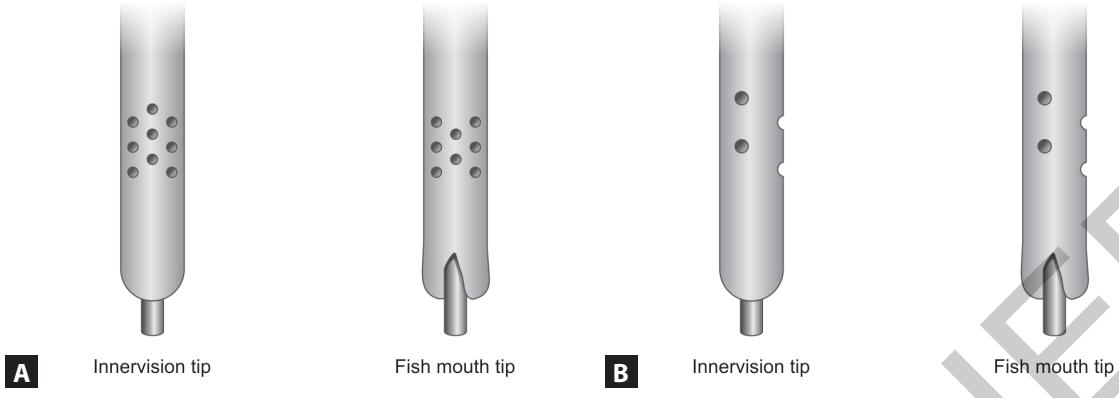

Figs. 6A and B: Tip of a ventricular catheter with a NeuroPEN endoscope inside of it. The scope can be advanced in front of the tip via two different types of catheters: (1) Innervision or (2) fish mouth. The catheter can then be placed in the desired location under direct visualization.

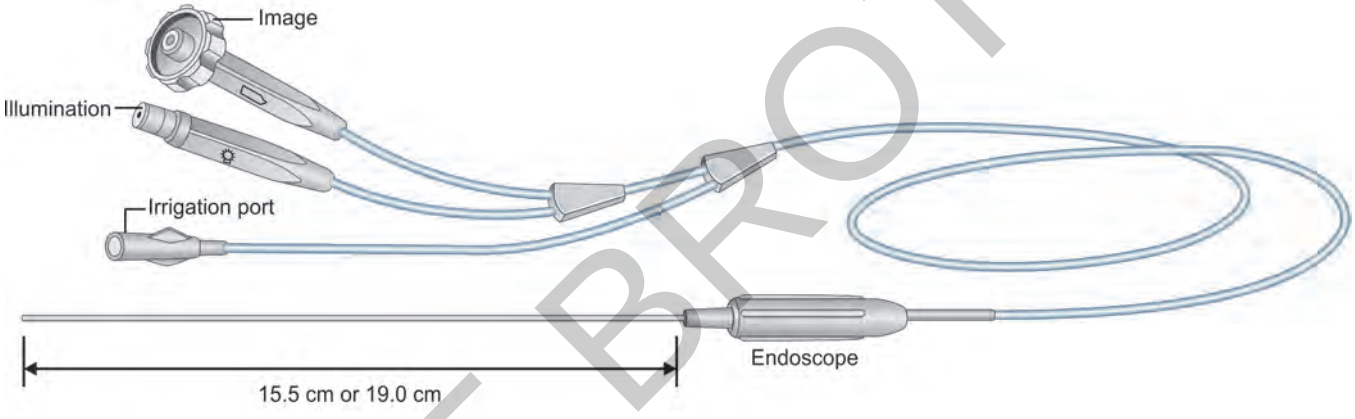

Fig. 7: NeuroPEN neuroendoscope illustration showing the entire system. This disposable scope has a coupler for a camera and light source as well as a single irrigation port. Irrigation is very useful particularly when placing the ventricular catheter in small ventricles or cysts.

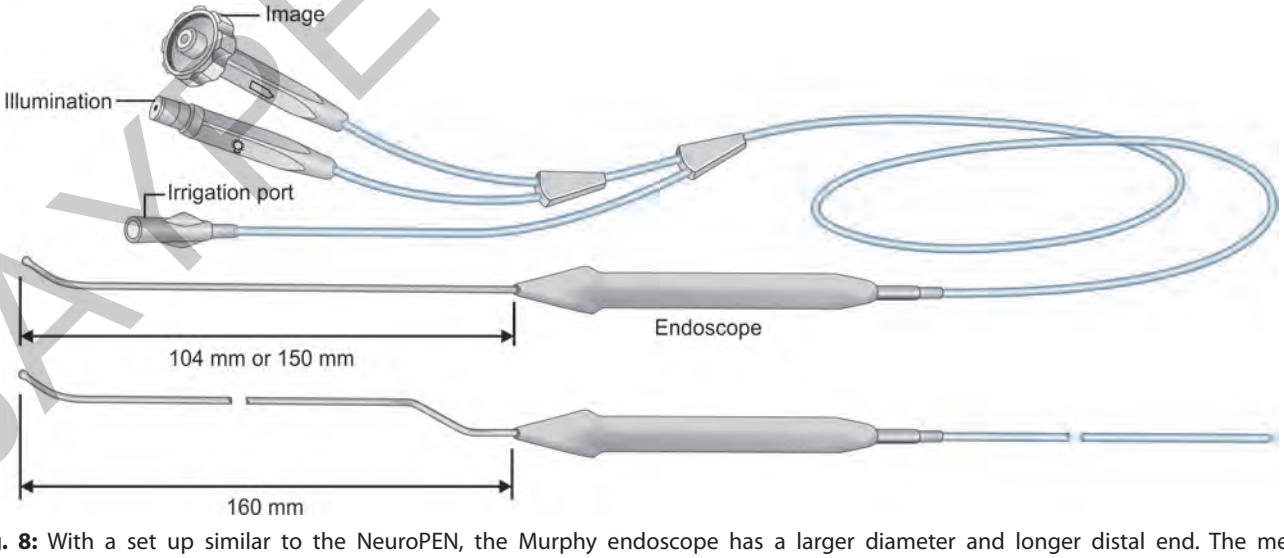

Fig. 8: With a set up similar to the NeuroPEN, the Murphy endoscope has a larger diameter and longer distal end. The metal surrounding the optical fibers is malleable and as such the tip may be bent in any direction or angle.

JAYPEE BROTHERS

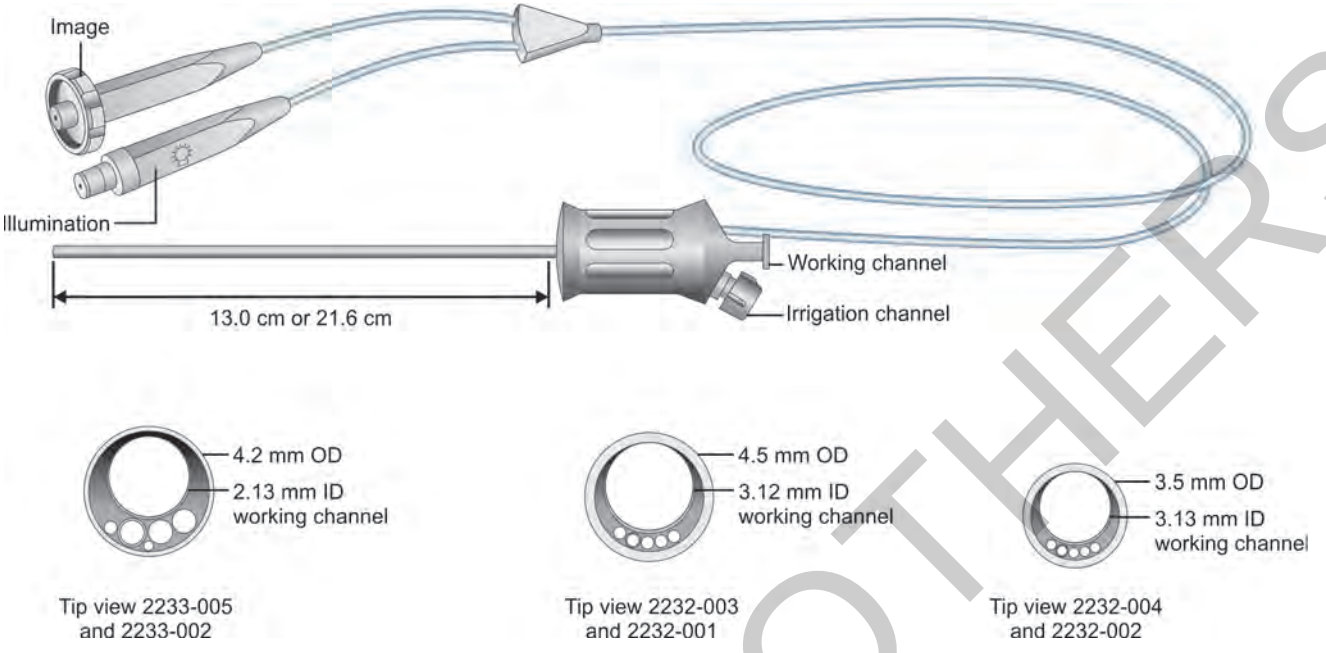

Fig. 9: The channel scope is manufactured with different outer diameters (3.5 mm, 4.2 mm, and 4.5 mm). Likewise, the working channel comes in varying diameters and has an irrigating proximal port as well.

better visualization and hydro dissection of tissue (Fig. 8). Lastly, a larger more rigid endoscope (the Channel endoscope, Medtronic) with an outer diameters ranging between 3.5 mm and 4.5 mm are also available. These scopes have working channels with internal diameters ranging between 2.13 mm and 3.12 mm. Also equipped with irrigating channel, these endoscopes provide adequate access and visualization (Fig. 9). Although the resolution is significantly less than that of rigid scopes, the cost is significantly less as well.

ENDOSCOPE HOLDERS

There are several types of endoscope holders available for neurosurgeons to use during endoscope procedures. Typically, the endoscope can be handled by the surgeon until reaching the desired location and angle of approach. Once the area of interest is reached, the endoscope can be locked in place, thereby freeing a hand and improving control. Flexible endoscopes must be placed in holders so that both hands can manipulate the control unit and the tip of the endoscope.

Semirigid Holders

Any of the flexible arms of the commonly available brain retractor systems can be adapted and used as an endoscope holder. For example, the flexible arm of the Leyla retractor (Integra, Plainsboro, NJ) can be attached to a rigid bar (Fig. 10) and be used as an adequate scope holder. The same can be done with the flexible arm of a Greenberg retractor (IM Greenberg, MD, Roslyn Estates, NY).

Rigid Articulated Nonpneumatic Holders

Storz manufactures an autoclavable endoscope system consisting of a socket clamp that attaches to the operating table, and articulated stand and a clamping jaw (Fig. 11). It is somewhat awkward to use and three points need to be loosened or tightened whenever an adjustment is necessary. However, it is very useful once the surgeon becomes used to using it.

Pneumatic Holder

Mitaka USA, Inc (Park City, UT) manufactures the Mitaka Point Setter pneumatic holding system, an OR table mounted holding system that holds a variety of surgical instruments including endoscopes. The system utilizes fail safe nitrogen breaks, and easily connects to hospital's operating room nitrogen systems. The holder's design allows for smooth surgeon control of the unit with joints that are designed for even movement with low friction (Figs. 12 and 13). The holder is designed for single hand

JAYPEE BROTHERS



Fig. 10: Intraoperative photograph shows the Mitaka arm holding a rigid endoscope in place. The obturator metal sheet is seen in the burr hole and providing access to the ventricular system.

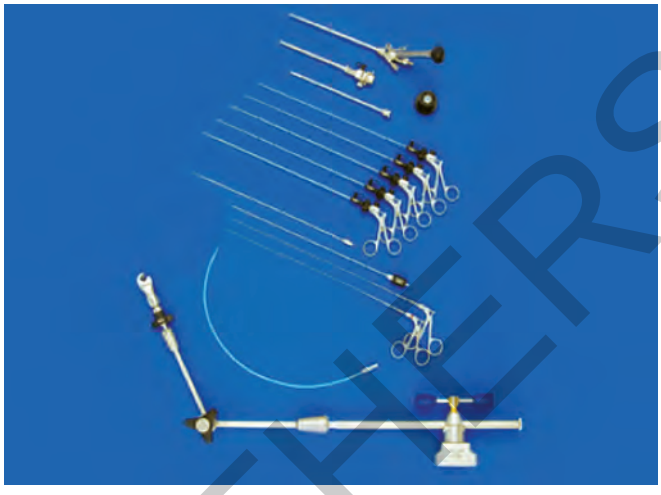

Fig. 11: The Storz semirigid endoscope holder is visualized in the lower most part of the photograph. Three joints with their appropriate tightening/loosening mechanism are illustrated.



Fig. 12: The pneumatic Mitaka endoscope holder is seen attached to the bed before prepping and draping. Before starting the surgery, it should be properly positioned and secured so that it may reach the surgical field unhindered.

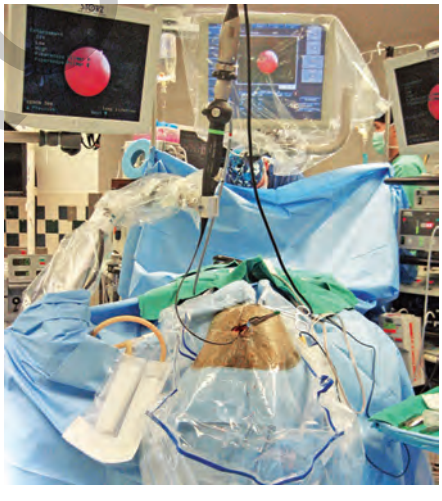

Fig. 13: The Mitaka arm fully draped and holding a flexible endoscope with the attached camera.

control and can be placed in many positions without backlash. This strong system is designed to hold heavy endoscopes with multiple instruments in a predictable and steady fashion. I have found it to be very versatile and reliable over many years.

ENDOSCOPIC INSTRUMENTS

Given the relatively small number of neuroendoscopic procedures performed (as compared to laparoscopic general, urologic, or gynecological procedures) the manufacturing companies have not developed as varied and extensive instrumentation for neurosurgery. Basically, instruments for both rigid and flexible scopes consist of only grasping and biopsy forceps as well as scissors and coagulators.

Biopsy Forceps

A pistol grip action allows for opening and closing the forcep's cups for tumor biopsy. Double action jaws allow for efficient tumor sampling (Figs. 14A to C). For rigid endoscopes semirigid forceps ranging from 1 mm to 2.3 mm and with working lengths of 30–45 cm are available for

JAYPEE BROTHERS

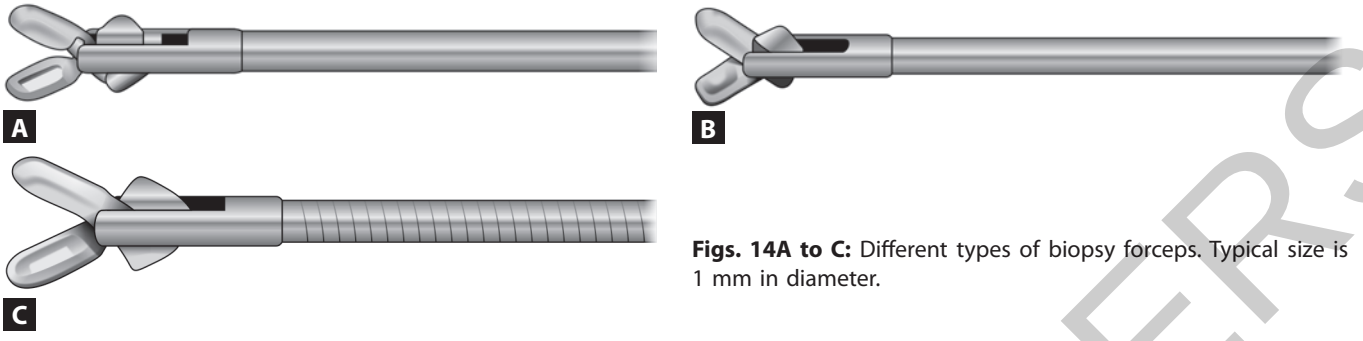

Figs. 14A to C: Different types of biopsy forceps. Typical size is 1 mm in diameter.

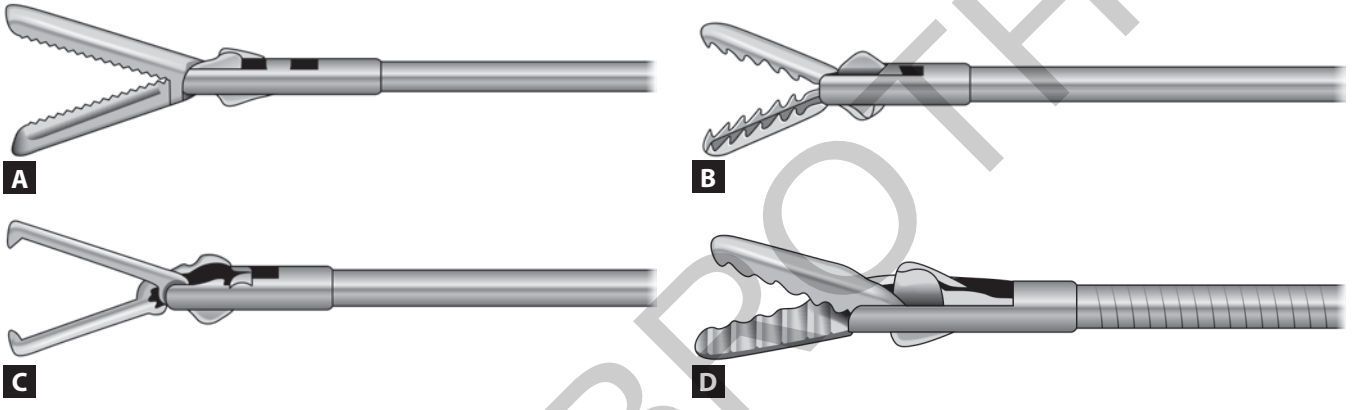

Figs. 15A to D: Different types of grasping forceps.

flexible endoscopes, flexible forceps of 1 mm diameter, and with a working length of 60 mm are also available.

Grasping Forceps

Often times, grasping cyst or tumor wall for endoscopic resection or mobilization is necessary. Grasping forceps are used and these single action instruments come both in flexible and semirigid forms to be used with flexible and rigid endoscopes, respectively. Likewise, they range in diameter from 1.0 mm to 2.3 mm and in working lengths between 30 cm and 60 cm (Figs. 15A to D).

Scissors

As with any other surgery, sharp dissection and cutting is performed in neuroendoscopic procedures miniature single or double action scissors are available for use. Introduced through the working channel, they vary in diameter between 10 mm and 2.7 mm and working lengths between 30 cm and 60 cm (Figs. 16A to D).

ELECTRODES

Monopolar

Achieving adequate hemostasis is extremely important in endoscopic surgery in a fluid medium. Any amount of blood in the fluid, no matter how small, will lead to a significant decrease in visualization. Consequently, obtaining hemostasis is virtually a necessity in order to perform these cases. Energy sources are needed to accomplish appropriate hemostasis and come in the mono- or bipolar variety. Several instrument sets come with these electrodes or they are available for third party vendors. A typical coagulating electrode attaches to a standard monopolar energy source, commonly available in all operating rooms such as the Codman's ME2 (microendoscopic electro) retractable monopolar system (Fig. 17) or Cook's monopolar electrode with ball tip or pencil point tip. Coagulation energy may also be delivered with bipolar electrodes as seen in Figure 18.

JAYPEE BROTHERS

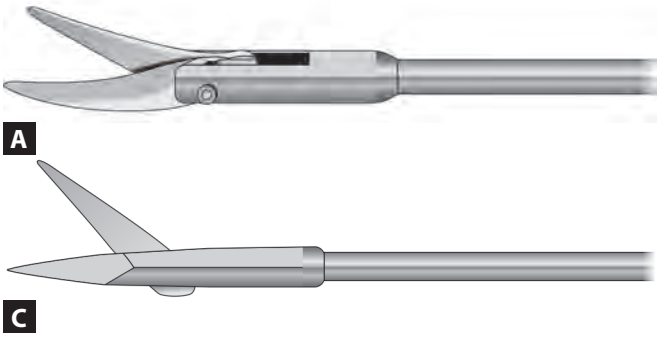

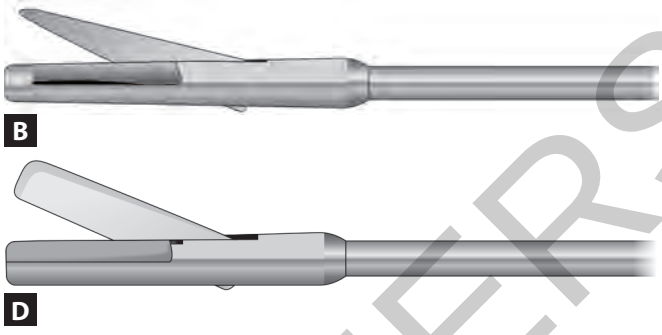

Figs. 16A to D: Different types of scissors.

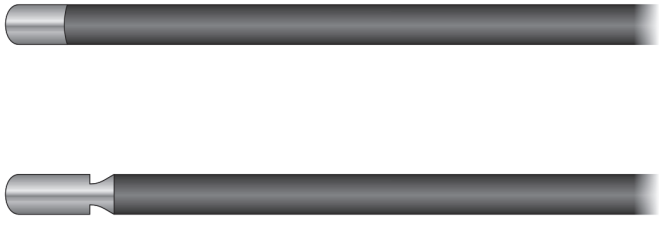

Fig. 17: Different types of monopolar electrodes used through the endoscope's working channel..



Fig. 18: A bipolar electrode. Current moves between electrodes placed proximally and distally producing coagulating energy.

Lasers

Laser energy delivery systems are excellent modalities to deliver hemostatic energy in an aqueous environment. These are manufactured so that the energy can be delivered through very long, flexible fibers of varying diameters.

Nd:YAG Laser

Neodymium-doped yttrium-aluminum-garnet (Nd:YAG) is a crystal that is used as a source of providing energy for solid state lasers. Neodymium is used as the dopant for doping agent replaces small fraction of the yttrium and provides the lasing activity of the crystal. Nd:YAG lasers are optically pumped using laser diodes and emit light with a wavelength of 1,064 nm in the infrared spectrum. The laser light absorbs mostly in the bands between 730 nm and 760 nm, which is close to the absorption spectra of hemoglobin. This characteristic makes the Nd:YAG laser ideal for coagulation during neurosurgical procedures in the cerebrospinal fluid environment. The energy is delivered through long fibers of varying diameters (220 nm, 365 nm, or 550 nm) all which easily fit into the working channel of the endoscopes. Energy can vary between 1 watt to as high as 100 watts. Most of the work can be done within a range of 5–20 watts. The unit can be set to deliver single pulses or on a continuous mode. I found the Nd:YAG laser to be extremely versatile and useful when approaching a vascularized lesion (cyst wall, tumor capsule, etc.) the laser tip can be positioned at 5 mm or 10 mm from the target and as the energy is delivered, it diffuses and causes hemoglobin denaturing and the vessels disappear as if being painted with a white air brush. Once devascularized, the capsule can be opened with direct contact with the fiber. As such, it acts as a cutting tool as well (Fig. 19).

Potassium-Titanyl-Phosphate Laser

A potassium-titanyl-phosphate (KTP) crystal doubles the frequency of pulsed Nd:YAG laser to a 532 nm wavelength located in the green electromagnetic spectrum. It also absorbs hemoglobin in an excellent manner and obtains coagulation and is not absorbed by water. As with YAG lasers, the energy can be delivered via long fiber cables of varying diameters and can be placed inside the endoscope working channel.

JAYPEE BROTHERS

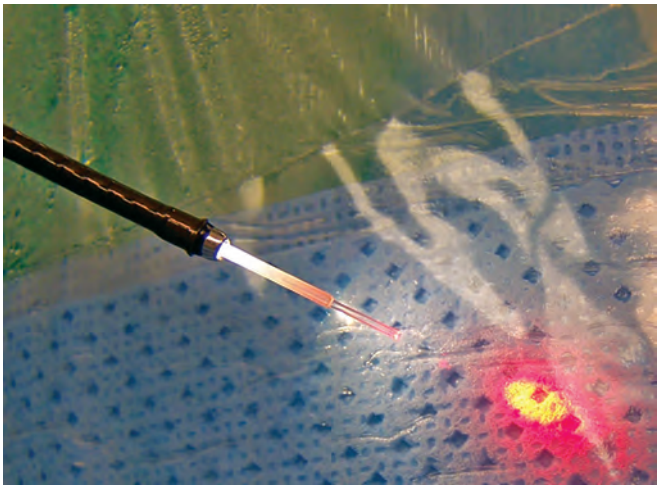

Fig. 19: A 535 micron Nd:YAG laser fiber seen exiting the working channel of a flexible endoscope. The red light indicates the location of where the energy will be delivered.



Fig. 20: GOLD LASER delivery system.

2 Micron Laser

The newest laser is available is the 2 micron laser, which is almost identical to the well-established Holmium laser. The laser offers the cutting an ablation properties of the CO_2 laser, the excellent hemostasis of the Nd:YAG laser, and the shallow tissue effect of Holmium lasers. The tissue effect or damage is restricted to less than 1 mm beneath the cut. Vision impairment is minimal as no or minimal bleeding is encountered. This color neutral laser does not produce a visible glare as with KTP lasers. A significant advantage of this laser is that it does not require special power outlets (a standard 100–240 VAC can be used) and no cooling water is necessary. Power to tissue can vary between 1 watt and 30 watts, has a repetition rate of 0.5–10 Hz, and an aiming beam of 635 nm (USA laser products OHG, Katlenburg-Lindau, Deutschland). I have been using this laser for the past several years with excellent results.

Gold Laser

L-F 20/30/40 Gold Laser, manufactured by Medical Energy, Inc. (Pensacola, FL) is a new type of laser that is perfectly suitable for neuroendoscopic procedures in an aqueous environment and with great coagulating capabilities. The GOLD LASER™ is a solid-state laser that operates in the infrared spectrum in the 980 nm to 1000 nm levels (Fig. 20). The laser can be used outside of the ventricular system using a hand held delivery system (Fig. 21). This laser can be used in the continuous wave (CW) or pulsed wave (PW). It utilizes an active medium comprised of indium Gallium III Arsenide Phosphide (InGaAsP0 and the element gold (Au) both which emit energy in near infrared spectrum. This laser technology provides precise cutting, vaporization and coagulation simultaneously whilst controlling depth of penetration into the surrounding tissue, thus making it an ideal advanced tool for neuroendoscopic procedures. The LASERPOWERTOUCH Fiber Delivery Systems provides the surgeon with an array of different tip designs (Fig. 22). For instance, the angled, side firing, forward emission fiber delivery system is designed to deliver laser energy at 38 degrees. The Ball tip provides 360 degrees of contact surgical application, working only where tissue is touched. In **neurosurgical brain tissue procedures**, the laser gives the surgeon the ability to denature, vaporize, seal small bleeding vessels, and excise brain tumors, cysts, and scar tissue. The product offers a tangible technique, delivery through fluid, and precision contact and noncontact surgical application of less than < 0.3 mm while preserving surrounding healthy tissue and nerves.

Balloon Catheters

A very useful instrument in endoscopy is the balloon catheter. The balloon is located at the tip of a flexible catheter and inflates with air (Fig. 23). The typical

JAYPEE BROTHERS

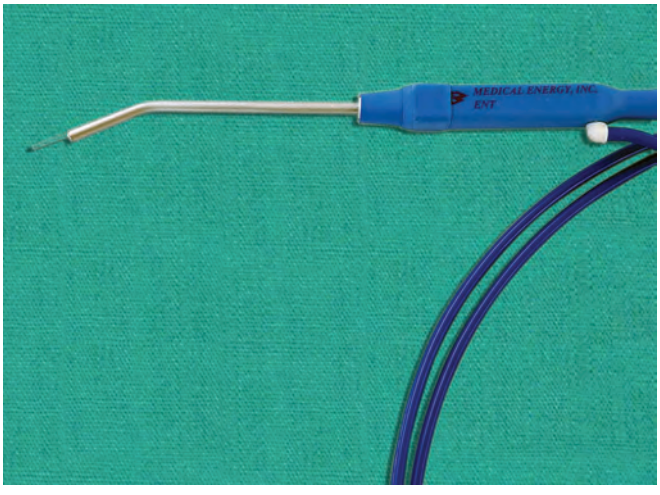

Fig. 21: Hand piece that can be used to deliver the GOLD LASER energy when not passing the laser fiber through the working channel of the endoscope.

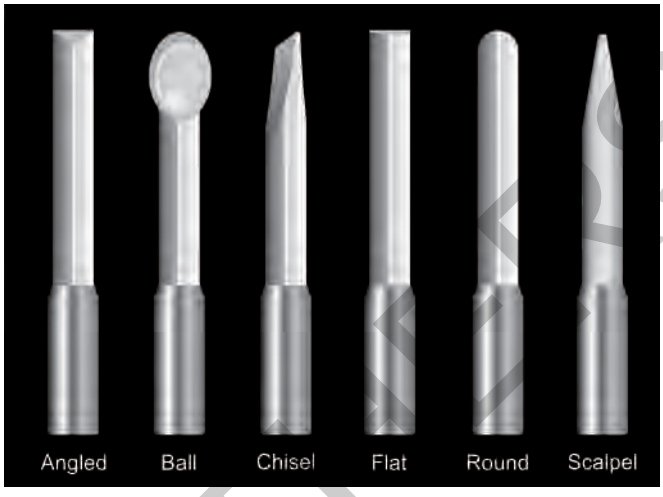

Fig. 22: The above tip designs indicate the distal, working end of the LASERPOWERTOUCH™ Fiber Delivery Systems of the GOLD Laser technology.

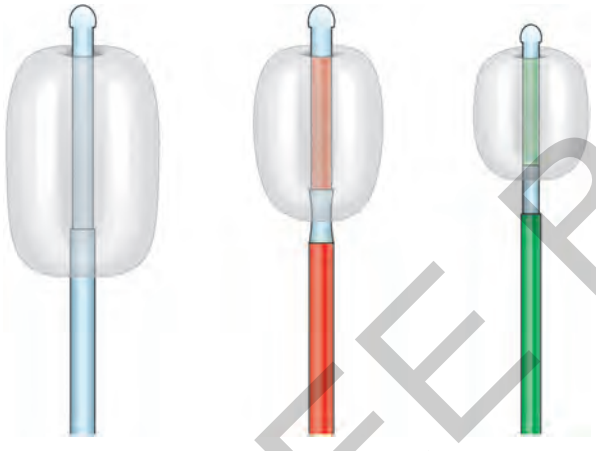

Fig. 23: Balloon catheters are very useful in neuroendoscopy. They are typically used to expand an ostomy or opening. Also may be used for tamponade bleeding.

3 French size allows the catheter to be deployed through the working channel. It is very useful for dilation of the fenestrated cyst wall or for opening an ostomy, as in the floor of the third ventricle. A relatively atraumatic method for expanding the opening, these catheters are very valuable in neuroendoscopy.

CONCLUSION

Although there is not a very extensive array of instrumentation available for neurosurgical procedures, what is available is sufficient to do the necessary work. As with all else, a good knowledge and understanding of the endoscopes and instruments will aid the surgeon in performing efficient and safe surgeries.

JAYPEE BROTHERS

for detailed information on surgery books, visit our website **www.jaypeebrothers.com,** for detailed information on surgery books, visit our website **www.jaypeebrothe**

Endoscopic Neurological Surgery

As technology continues to progress and advance, so have the principles and techniques of minimally invasive surgery. A clear example of its immense benefits can be seen with the advent of laparoscopic surgery. Long, complex, painful, and traumatic abdominal surgeries have been replaced by same day procedures. Similarly, minimally invasive techniques have been developed in neurosurgery. This book presents the reader with sixteen chapters that detail instrumentation, techniques, procedures, complication avoidance, and outcomes. It is primarily intended for neurosurgeons who desire to learn more about the discipline and want to incorporate these techniques into their practice. However, it is secondarily intended for those in the medical profession (other physicians, residents, medical students, nurses) who want to learn more about the field. Most chapters are divided into a current literature review and a "how to" section which describes details, nuances and aspects of each technique. Complex and cumbersome language has been avoided, yet the book is detailed sufficiently to guide surgeons through the operations.



David F Jimenez MD FACS completed his undergraduate degree at Temple University in Philadelphia and his medical training and education at Temple University's School of Medicine, and a Residency in Neurological Surgery at Temple University Hospital. He furthered his training by also completing a Pediatric Neurosurgery fellowship at Albert Einstein College of Medicine's Montefiore Medical Center in New York City. His academic career developed at the University of Missouri School of Medicine-Columbia where he rose to the rank of Professor and Residency Program Director. He was appointed Professor and Chairman of the Department of Neurosurgery at the School of Medicine of the University of Texas Health Science Center at San Antonio in 2005. Dr Jimenez, a prolific surgeon and writer, has not only performed over 6,000 procedures, many of them endoscopic, but also written 104 manuscripts, 39 book chapters, and 1 textbook.

Available at all medical bookstores or buy online at www.jaypeebrothers.com

JAYPEE

JAYPEE BROTHERS Medical Publishers (P) Ltd.

www.jaypeebrothers.com

Join us on facebook.com/JaypeeMedicalPublishers

Shelving Recommendations
NEUROLOGY, SURGERY

ISBN 978-93-5270-122-3

9 789352 701223