ebrothers.com, for detailed information on pathology books, visit our website www.jaypeebrothers.com, for detailed information on pathology books

Histopathology Techniques and its Management









Ramadas Nayak

JAYPEE

Histopathology Techniques
and their Management

Ramadas Nayak MBBS MD
Professor and Head
Department of Pathology
Yenepoya Medical College
Yenepoya University
Mangaluru, Karnataka, India
askdr.nayak@gmail.com

Formerly, Head
Department of Pathology
Kasturba Medical College
Manipal University
Mangaluru, Karnataka, India

JAYPEE BROTHERS



JAYPEE BROTHERS MEDICAL PUBLISHERS
The Health Sciences Publisher
New Delhi | London

Contents

1. Introduction and Examination of Tissues **1**

Examination of tissues 3

2. Fixation and Fixatives **12**

Chemical fixation 18
Classification of fixatives 24
Secondary fixation 32
Physical methods of fixation 33
Choice of a fixative 35
Special fixation of organs and tissues 36

3. Tissue Processing and Embedding **41**

Labeling of specimens 41
Selection of tissue (bit taking) 42
Transference of labeled tissues 43
Tissue processing 43
Stages of tissue processing 45
Types of tissue processing 58
Embedding (casting or 'blocking') 60
Tissue microarray 68

4. Decalcification **71**

Bone specimens 71
Techniques for demonstration of bone 73
Decalcification 74
Processing decalcified bone 82

JAYPEE BROTHERS

Undecalcified bone section 83
Softening of hard tissues 86

5. Microtomy and Section Cutting 87
Microtomy 87
Microtome knives 90
Trimming the block 101
Cutting/sectioning technique 102

6. Frozen Section and Cryostat 115
Frozen section 115
Cryostat 118

7. Theoretical Aspects of Staining 123
Dyes 125
Theory of staining 127
Terminology in staining 136

8. Hematoxylins and Eosin 141
Hematoxylin 141
Alum hematoxylins 142
Iron hematoxylins 147
Tungsten hematoxylins 150
Other hematoxylins 152
Cytoplasmic stains 152
Hematoxylin and eosin stain (H & E) 152
Quality control in routine H & E staining 153

9. Staining Procedure and Mounting 155
Staining procedure 156
Mountants 158
Mounting of paraffin section 163
Routine staining procedures 166
Technical problems and solutions in H & E staining 169
Filing of tissue blocks and slides 173

JAYPEE BROTHERS

Destaining and restaining 174
Errors in histopathology 175

10. Demonstration of Carbohydrates 176
Demonstration of carbohydrates 182
Alcian blue technique 190
Methods of demonstration of mucin 195
Lectins and immunohistochemistry 198

11. Pigments and Minerals 200
Hematogenous endogenous pigments 201
Non-hematogenous endogenous pigments 205
Artefact pigments 211
Exogenous pigments and minerals 213

12. Staining for Amyloid 215
Amyloid 215
Demonstration of amyloid 215

13. Connective Tissues Stains 219
Extracellular matrices 219
Cells of the connective tissue 223
Stains for collagen 223
Stains for reticular fibers 230
Stain's for elastic tissue fibers 237
Fibrin and fibrinoid 245

14. Stains for Lipids 246
Fat stains and the Sudan dyes 247

15. Stains for Microorganisms 250
Detection and identification of bacteria 251
Techniques for mycobacteria 253
Helicobacter 258
Spirochete 259
Identification of fungi 260
Practical application of histochemical stains 265

JAYPEE BROTHERS

16. Immunohistochemistry **267**

Immunohistochemical methods 269
Unmasking of antigen sites 274
Immunohistochemistry in practice 277
Quality control in immunohistochemistry 279
Practical aspects of immunohistochemical staining 280

17. Automation in Histopathology **291**

Automation in histopathology 291

18. Museum Technique **299**

Museum technique 299
Mounting of museum specimens 303

19. Microscope **306**

Compound microscope 307
Magnification and illumination 311
Phase contrast microscopy 313
Polarized light microscopy 314
Immunofluorescence microscopy 316
Measuring with the microscope 317
Setting up the microscope illumination 320
Use, care and maintenance of microscope 321
Electron microscope 323
Confocal microscopy 324

20. Photography **325**

Photomicroscopy 325
Photography of gross specimens 326
Digital pathology and telepathology 327

21. Biological Waste and its Management **330**

Biomedical waste 330
Biomedical waste management 333
Occupational safety and health of healthcare workers 342

JAYPEE BROTHERS

22. Total Quality Management **346**

Total quality management framework *346*
Quality laboratory processes *346*
Quality assurance *347*
Quality assessment *348*
Quality control *349*
Accreditation and certification *357*

Bibliography ***359***

Appendices ***361***

Index ***373***

JAYPEE BROTHERS

CHAPTER 5

Microtomy and Section Cutting

JAYPEE BROTHERS

CHAPTER OUTLINE

- Introduction
- Microtomy
- Microtome Knives
- Trimming the Block
- Cutting/Sectioning Technique

INTRODUCTION

It is very essential to have a good histological section for interpretation of microscopic findings. Two important factors for cutting of good histological sections are:

1. Thorough knowledge of the equipment used.
2. Practical experience which can be gained by practice.

Students undergoing histopathology training should first cut paraffin sections of soft tissue, such as liver or kidney. Once they are capable of producing long ribbons of thin sections (4–6 microns/μm in thickness), they should cut the more difficult tissue such as skin, breast or decalcified bone.

MICROTOMY

Microtomy is the **means by which tissue is cut into thin sections and attached to a surface of a slide.** The sections are stained and observed under microscope. Most microtomy is performed on tissue blocks embedded in paraffin wax and frozen/cryostat section. The basic instrument used in microtomy is the microtome.

Microtomes

Microtome is a **mechanical device** (instrument) **designed for the accurate cutting of thin uniform tissue sections for microscopic examination**. The tissue is supported in hard paraffin wax, or some similar embedding media/material. In microtome, an advancing mechanism moves (moves automatically in automatic microtomes) the object (e.g. paraffin tissue block) for a predetermined distance towards the cutting tool (either knife or blade). Between the cuts, the tissue specimen moves vertically towards the cutting surface of knife or blade and tissue section of desired thickness is produced. The thickness is usually graduated in 1 micron (μm) stages. When cutting paraffin wax embedded tissue each section sticks to the previous one by its edge, thereby producing a ribbon of sections. By practice, technologist can achieve good sections.

Parts of Microtome

1. **Block holder:** It holds the tissue block
2. **Knife carrier with knife**

3. **Adjustment screws and rachet device**. They help to line up the tissue in proper relation to the knife and also provide proper thickness of tissues for successive sections.
4. **Knob for adjusting the thickness:** It may be on the back, front or side of the microtome and is used to adjust the thickness of sections.

Care and Maintenance of Microtome

1. **Clean and lubricate the moving parts** of the microtome regularly.
2. Frequently **clean the surface of microtome**.
3. After cutting paraffin sections, **accumulated paraffin and tissue should be removed using a soft brush.**
4. **Clean the metal parts** carefully using xylene.
5. **Cover the microtome when not in use**.

Types of Microtome

There are different types of microtomes designed according to the tissue to be sectioned and the embedding medium in use. Excluding ultramicrotome, there are five basic types of microtome, named according to the mechanism: (1) rocking, (2) rotary (most commonly used), (3) sledge, (4) sliding and (5) freezing microtomes.

Rocking Microtome *(Fig. 5.1)*

- It is the one of the oldest design.
- In the rocking microtome, the **knife is fixed** and the **block of tissue moves through an arc** and strikes against the knife. In between strokes the block moves towards the knife for the required thickness of the sections, by means of a micrometer thread operated by a ratchet. It is named rocking because the **rocking action of the cross arm**. Its mechanism is simple.



Fig. 5.1: Rocking microtome

Advantages

It is cheap, reliable, simple to use, usually trouble free, requires minimum maintenance and the machines literally last a lifetime. Very small blocks can be cut.

Disadvantages

The **size of block that can be cut is limited** and since the block moves through an arc when cutting, the **sections are cut in a curved plane**. It is not used nowadays. It **has light weight** and therefore to avoid movement during cutting it has to be either fitted into a tray which is screwed to the bench, or to place it on a damp cloth.

Rotary Microtome *(Fig. 5.2)*

- The rotary microtome was first designated by Professor Minot and often referred to as the "Minot Rotary". The rotary microtome is named so because the **basic mechanism is the rotation of hand-wheel by 360° degrees** which cause the movement of the specimen vertically past the cutting surface. It is the **most commonly used** microtome.
- The tissue block-holder is mounted on a steel carriage which moves up and down in grooves. Since the block advances by a micrometer screw, it **cuts perfectly flat**

JAYPEE BROTHERS



Fig. 5.2: Rotary microtome (Leica semi-automatic)

sections. The mechanism that advances the block may be retracting or non-retracting. Sections are cut as a result of the vertical rise and fall of the tissue block against a fixed knife/blade edge. As sections are cut the tissue block moves forward and this forward movement is controlled by a micrometer screw. Both the vertical and forward movement of the tissue block is produced by the rotation of the hand-wheel (fly wheel). The block holder has screws which adjusts its position so that the tissue block is parallel to the knife edge. There are screws which adjusts the clearance angle (angle of tilt) of the microtome knife.

Subtypes

It is one of the few microtomes that tend itself being motorized. Three types of rotary microtome are (1) **manual** which is completely manipulated by the operator, (2) **semi-automated** in which one motor to advance either the fine or course hand-wheel, or (3) **fully automated** in which two motors that drive both the fine and the course advance hand-wheel.

Advantages

- **Ability to cut thin 2–3 µm sections and large numbers of sections** from each block.
- **Can easily cut all type of tissue** (i.e. hard, fragile or fatty).
- **Heavier** and has larger knife and therefore **more stable** than the rocking type. There is **less chances of vibration when cutting exceptionally hard tissue**.
- **Excellent ideal instrument for cutting serial sections** conveniently and consistently.
- **Larger blocks of tissue may be cut**.
- By use of a special holder to set the knife obliquely it **may also be used for cutting celloidin-embedded sections.**
- **Cutting angle (tilt of knife) and knife angle can be adjusted.**
- **Only microtome used for teaching purposes.**

Disadvantages

Manual hand-wheel operation **may predispose to repetitive motion disorders in histotechnician operating this microtome.** There is greater chance to cut finger while sectioning.

Sledge Microtome

- In the sledge microtome, the **specimen is held stationary** and the **knife slides**/moves **across the top of the specimen** during sectioning.
- In this microtome, the block-holder is mounted on a steel carriage which slides backwards and forwards on guides against a fixed horizontal knife.

Advantages

- **Used primarily for cutting sections of very large blocks of tissue** (e.g. whole brains in neuropathology or eyeball in ophthalmic pathology) **and hard tissues**. There is no restriction on size when selecting pieces of tissue for sectioning.
- It is **heavy, very stable and not subject to vibration**.
- **Knife used is a large** (24 cm in length) and usually wedge-shaped, which reduces the

JAYPEE BROTHERS

possibility of vibration and **requires less honing**.
- The **knife-holding clamps are adjustable** and **allow easy setting of the tilt and the angle** (slant) of the knife to the block.
- **Variety of stages is available for blocks of various sizes**, either mounted on wood or directly fixed with molten paraffin. **Freezing stage is also available**.
- Because of the adjustable knife holder, this **may be used for cutting celloidin sections** by setting the knife obliquely.

Disadvantages
- Very **much slower** than a rocking or rotary microtome.
- **Three micron (µm) sections are difficult to produce**.

Sliding Microtome
In this microtome, during sectioning the **knife or blade moves horizontally against a fixed tissue block** which is advanced against it up an inclined plane.

Advantage
The sliding microtome was **designed for cutting celloidin embedded sections** but **can be used for paraffin wax embedded sections also.**

Freezing Microtome (refer Chapter 6)
Other microtomes mentioned above can be modified for cutting frozen sections. However, the **freezing microtome** (Fig. 5.3) **gives the best results for cutting frozen sections**. It can be fitted with a block-holder for paraffin sections.

Uses
- When speed of report is utmost important. Diagnosis can be made within few minutes.
- For demonstration of fat histologically. Also for enzyme studies.
- When neurological structures to be studied.

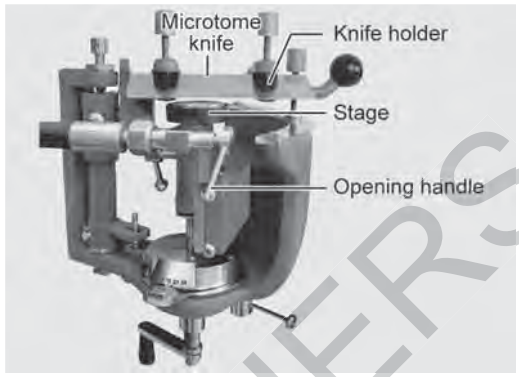

Fig. 5.3: Freezing microtome

Box 5.1: Microtomes in which knife moves

1. Sliding microtome
2. Sledge microtome
3. Freezing microtome

Other Microtomes
Ultramicrotome: Used only for electron microscopy. They have more complicated mechanism.

Vibrating knife microtome (vibratome): In this sections can be obtained without fixation, impregnation or freezing. It is mainly used for enzyme histochemistry and ultrastructural histochemistry. During sectioning the tissue is immersed in water or saline. It is cut by a vibratory razor at a thickness more than in paraffin sections. Usually sections are cut at a very slow speed to avoid disintegration.

Microtomes in which knife moves is listed in Box 5.1.

MICROTOME KNIVES
Microtome knife plays main role in producing good sections, since it can cause a greater number of faults than any other piece of apparatus. A really sharp, well-adjusted knife can make section cutting easy. It is important to take care and attention of the knife.

JAYPEE BROTHERS

It is important to use microtome knives of guaranteed hardness according to Vicker's scale.

Vicker's hardness test: In this the surface area of the knife is identified by a diamond under a standard force of about 5 kgf to 120 kgf for 15 seconds (kgf = kilogram-force is a gravitational metric unit of force).

Vicker's hardness number (VHN): It is obtained by dividing the applied force by the surface area of identification ($VHN = 1.72P/D^2$).

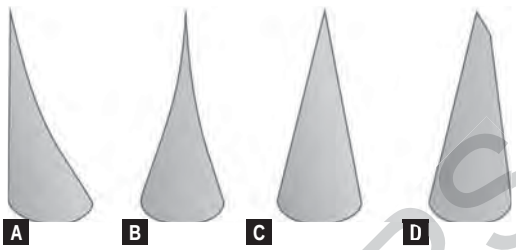

Figs 5.4A to D: Microtome knife profiles. (A) Plano-concave (Profile A); (B) Biconcave (Profile B); (C) Wedge(Profile C) and (D) Tool edge (D-profile)

Types of Microtome Knives

There are many shapes, sizes and materials for microtome knives. Presently, most steel knives have been replaced with disposal blades, except the tool-edge knives for resin, and steel knives for some cryostats. Microtome knives are of two main types: (1) **Heiffor knife** (used on rocking microtomes) with a fixed handle. (2) **Larger knives**: They range from 8 cm in length (for freezing microtomes), to the knife 24 cm in length (used for sledge microtomes). They have detachable handles which screw into one end.

Classification

Microtome knifes are classified as (1) metal knives (includes standard steel, razor blades and disposable knives made up of steel) and (2) non-metallic knives (glass and diamond).

Standard Steel Knives

Microtome knives are classified according to their shapes when viewed in profile (Fig. 5.4). Knives are modeled according to the tissue to be sectioned and the embedding medium. There are many knife profiles such as profile A,B,C,D and E.

- **Plano-concave** (Profile A)**:** This type of knife has one plane surface and the other is concave (Fig. 5.4A). This type of knife is used for sledge microtomes and certain rotary microtomes. They are largely replaced by wedge. In this type the plane surface is closest to the tissue blocks.
- **Plano-concave (very concave):** It is used only for celloidin work, because the blade is comparatively thin and would vibrate if used to cut a harder material.
- **Plane-wedge:** It is rigid and can be used for cutting frozen sections, giant and ordinary routine paraffin sections and hard tissues embedded in celloidin. It is the most commonly used microtome knife, especially in rotary microtomes. It is easy to sharpen.
- **Biconcave** (Profile B)**:** This knife is concave on both surfaces (Fig. 5.4B). It is recommended for paraffin section cutting on rocking (Heiffor knife) and sledge-type microtomes. Though relatively easy to sharpen, because of it is **less rigid and prone to vibration,** this has lost popularity.
- **Wedge** (Profile C)**:** It is plane on both sides (Fig. 5.4C). It was originally designed for cutting frozen sections because of its great rigidity. It can be used for cutting all types of sections in any of the microtomes.
- **Tool edge** (Profile D)**:** It resembles the chisel of a carpenter (chisel-edge) in which one edge is straight and the other has a short bevel (Fig. 5.4D). It is used to cut sections from exceptionally hard tissues (e.g. decalcified cortical bone,

JAYPEE BROTHERS

undecalcified bone). The edge may be coated with tungsten carbide to increase the life.

Parts of Metal Knives

The various parts of the knife (Fig. 5.5) are:

- **Heel of the knife:** It is the angle formed by the cutting edge and the end of the knife nearest the handle.
- **Toe of the knife:** It is the angle formed by the cutting edge and that end of the knife farthest from the handle.
- **Honing guide/knife back sheath:** It gives the necessary angle while honing and stropping. Thus only edge facets are sharpened. Each knife is supplied by a specific non-interchangeable knife back which should not be interchanged with a back of other knife while sharpening.
- **Handle:** Useful for handling during sharpening of knife. Heiffor knives does not need neither back nor handle for sharpening. Deeply biconcave knives require screw-in-handle.

Choice of Knife

- **Celloidin sections:** Use plano-concave (very concave) knife.
- **Frozen sections:** Best cut with a plane-wedge type, but can be cut with a Heiffor knife (biconcave) if a wedge is not available.
- **Smaller types of knife:** It is better to have two knives, (1) one for rough work such as trimming the block prior to the actual cutting (usually an old one) and (2) other best knife for cutting.
- **Longer type of knife:** In this one end can be used for trimming and the other end reserved for cutting. Other advantage is that it requires less sharpening because when one part of the edge becomes blunt

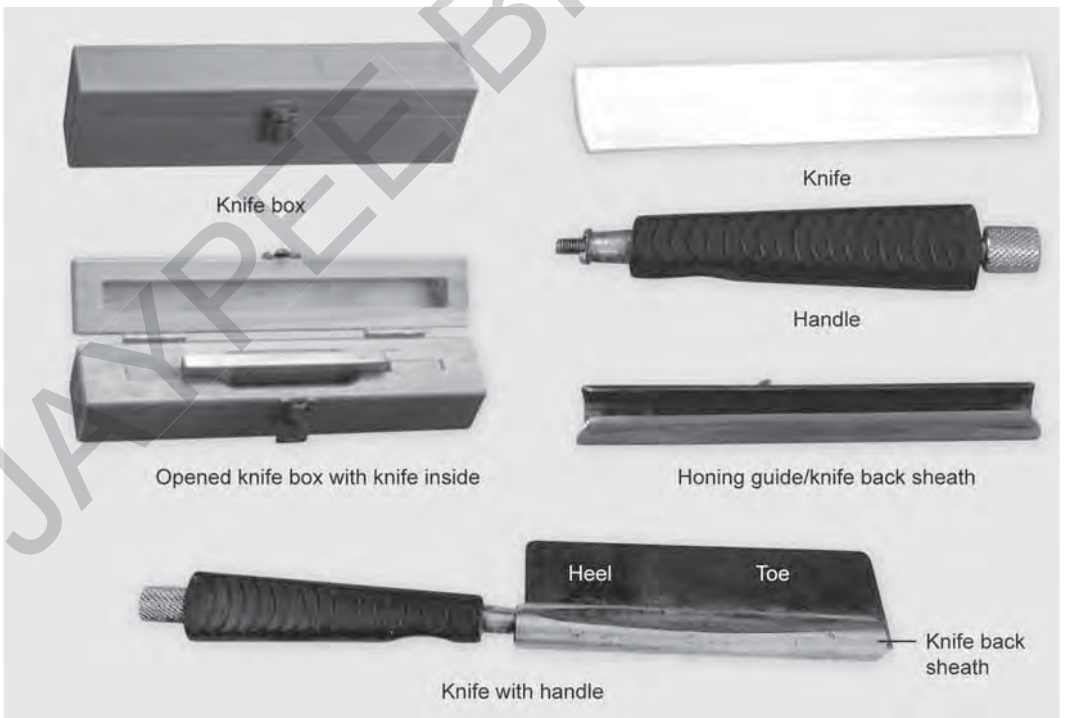

Fig. 5.5: Various parts of microtome knife

JAYPEE BROTHERS

the knife can be moved along to bring a sharper part to bear on the block.

Microtome Knife Angles

Ideally, the cutting edge of a knife would be straight line formed by the convergence of two planes namely the cutting facets or bevels. But the internal crystal nature of knife does allow cutting edge of the line to be a straight line and the edge is inevitably slightly rounded. This feature is defined in terms of the average radius of curvature. If the radius is closer to mathematical bevel the edge is sharper.

Various angles play important roles in getting the perfect tissue sections. Hence, it is necessary to know these angles involved in the process of cutting.

- **Wedge angle:** This is the **angle between the sides of the knife** of the wedge knife (15°) and this is the body of the knife or blade. The surfaces of these two sides are highly polished so that the sections will not adhere to them but will move on their surface. This minimizes folding, distortion, and sticking, and helps in cutting good ribbon sections. The actual cutting edge of knife is not an extension of the two converging sides of the knife as explained in Figures 5.6 and 5.7.
- **Bevel (facet or cutting) angle:** Usually, a knife has two cutting facets/bevel which form actual cutting edge of the knife. The actual cutting part of a knife forms a very small area, the sides of which (cutting facets) are more acutely inclined toward each other than the sides of the microtome knife proper. **Bevel (facet or cutting) angle is the angle formed at the actual cutting edge** (the tip of knife or blade) between these cutting facets or bevel (27–32°). Thus, bevel angle is the angle formed between the cutting facets where they meet at the cutting edge. It is the straight line formed by the intersection of two planes, the cutting facets. **It is greater than the wedge angle between the sides of the knife**. During manual sharpening, it is the cutting facets of knife that is to be sharpened and not the rest of the knife surface. To achieve this, a semicircular metal sheath is slipped onto the back of the knife during sharpening thereby bring only the cutting facets in contact with the sharpening surface.

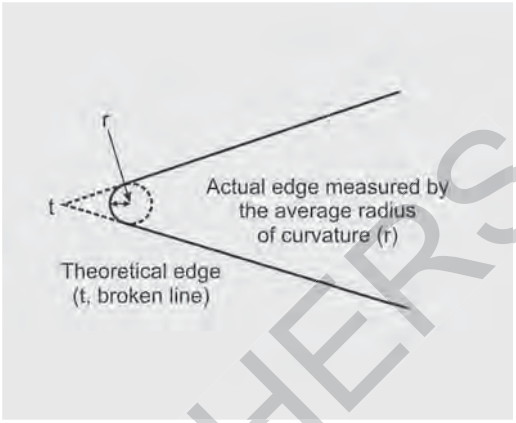

Fig. 5.6: Diagrammatic appearance of theoretical edge (t) over actual edge of microtome knife (r)

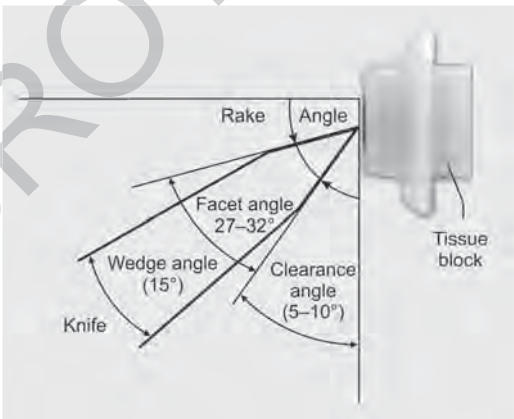

Fig. 5.7: Angles associated with knife edge

JAYPEE BROTHERS

- **Clearance angle:** It is the angle between the block face and lower cutting facet of knife (Fig. 5.7). Thus, clearance angle or tilt angle of the knife is the angle between the straight edge and the surface of the block. It is the only knife angle that can be adjusted on a microtome using the knife tilt or knife holder. It is essential in order to avoid friction between the block and knife.
  - It is set between 5–10° (refer Fig. 5.15A) and can be adjusted easily to suit the blade and block for better sectioning. Once the proper clearance angle is found for a particular blade, it rarely needs to be changed. With low profile blades the clearance angle is set at 5° for cutting best sections in most microtomes and prevents friction between the block and the knife, especially on the return stroke.
  - If the clearance angle is too wide (refer Fig. 5.15B), the tip of the blade will scrape the block and results in chatter.
  - If the clearance angle is too small (refer Fig. 5.15C), the body of the blade will scrape the block resulting in skipped sections or poor ribboning.
- **Cutting angle: Angle between the block face and upper cutting facet of knife**. This angle cannot be adjusted on a microtome. It is the result of the clearance angle and the upper bevel angle of the knife or blade.
- **Rake angle: 90° minus angle of upper cutting facet of knife**. The rake angle is the angle between the upper surface of the cutting facet and the surface of the block (Fig. 5.7). It is directly proportional to clearance angle. A large rake angle facilitates easier cutting of tissue sections but an increase in the rake angle is done at the expense of the clearance angle. Therefore, during cutting sections a compromise between the rake and the clearance angles has to be reached to get satisfactory tissue sections.

Razor Blades on Steel Knives

Ordinary shaving blades can be used by fixing it to a special clamp device to the steel knife. This clamp device helps in keeping the razor blade edge slightly over the cutting edge of the standard knife. Advantages of these blades is that constant sharp cutting edge is available and the blades can be replaced by a new razor blades when they become blunt. No honing is needed and is economical. However, while cutting hard tissues the fracture of the blade can occur.

Knife Material

Microtome knives are usually made up of **good quality high carbon or tool steel** tempered from tip inward for 1/3 of width.

Disposable Blades

Presently, disposable stainless steel blades and Teflon coated blades are used for routine microtomy and cryotomy. They provide a sharp cutting edge and can produce almost flawless 2–4 μm sections. Disposable blade holders can be incorporated into the microtome or with use of an adaptor. The blades will be supplied in dispensers, with or without a special polytetrafluoroethylene (PTFE) coating.

Types of disposable knives

Stainless steel disposable blade holders are available for all disposable blades, which can be fixed on all types of microtome. They can be placed in place of conventional standard steel knives. Blades are fed into the holder direct from the dispenser cassette and clamped in position by a single twist. There are two types of disposable blades (Fig. 5.8).

1. **High-profile disposable blade:** It is made up of heavier gauze steel than

JAYPEE BROTHERS

detailed information on pathology books, visit our website **www.jaypeebrothers.com,** for detailed information on pathology books, visit our website

Histopathology Techniques
and its Management

Salient Features

- Provides basic concepts of histopathology techniques required to be known by postgraduate students in pathology and students of medical laboratory technology
- Provides knowledge in a simple, lucid and easily understandable and reproducible format
- Concise text in bullet form for easy review and recollection
- Key points are provided in bold type, so that it will help the students to just brush through the entire book within few hours before the examination or viva voce
- Provides frequently asked questions in the examination
- Text enhanced by illustrations, gross photographs, microphotographs, tables and text boxes
- Deals with the management of various problems encountered in histopathology techniques.



Ramadas Nayak MBBS MD was graduated from Mysore Medical College, Mysuru, Karnataka, India, in the year 1979 and completed his postgraduation in Pathology from Kasturba Medical College, Mangaluru, Karnataka, India. Presently, he is Professor and Head, Department of Pathology, Yenepoya Medical College, Yenepoya University (Accredited by NACC with "A" grade), Mangaluru. In his illustrious teaching career of 34 years, he was Head, Department of Pathology, Kasturba Medical College, Manipal University, Mangaluru, for a span of 5 years. Apart from publishing over 82 scientific papers in both national and international journals, he serves as an examiner for both undergraduate and postgraduate examinations in several universities. He has worked as project officer for Development of Cancer Atlas in India—a project conducted by Indian Council of Medical Research (ICMR) sponsored by World Health Organization (WHO). He was the editorial Committee Member of South Asia Edition of *British Medical Journal*. He is also the author of eight more books entitled *Essentials in Hematology and Clinical Pathology, Textbook of Pathology and Genetics for Nurses, Rapid Review of Hematology, Exam Preparatory Manual for Undergraduates in Pathology, Exam Preparatory Manual for Undergraduates—Pathology for Dental Students, Textbook of Pathology for BPT Students, Exam Preparatory Manual for Undergraduates in Medicine* and *Textbook of Pathology for Allied Health Sciences*. Twice he secured "Good Teacher Award" and eight times "Best Audiovisual Award" in Kasturba Medical College, Mangaluru. Above all, he is loved and admired by his students.

Available at all medical bookstores
or buy online at www.jaypeebrothers.com

JAYPEE BROTHERS
Medical Publishers (P) Ltd.
www.jaypeebrothers.com

Join us on facebook.com/JaypeeMedicalPublishers

Shelving Recommendation
PATHOLOGY

ISBN 978-93-5270-234-3