brothers.com, for detailed information on physiotherapy books, visit our website www.jaypeebrothers.com, for detailed information on physiotherapy books



4th Edition

Pharmacology *for* Physiotherapy Students



Padmaja Udaykumar

Foreword
M Shantharam Shetty

JAYPEE

Contents

1. General Pharmacology **1**
- Routes of Drug Administration 3
- Enteral Route 3
- Parenteral Routes 5
- Injections 6
- Inhalation 8
- Transdermal Route 9
- Local/Topical Application 9
- Special Drug Delivery Systems 10
- Pharmacokinetics 11
- Pharmacodynamics 21
- Factors that Modify the Effects of Drugs 26
- Adverse Drug Reactions 29
- Drug Allergy 30
- Drug Interactions 32

2. Autonomic Nervous System **34**
- Introduction to Autonomic Pharmacology 34
- Cholinergic System 35
- Cholinergic Drugs 36
- Anticholinergic Drugs 42
- Adrenergic System 45
- Adrenergic Drugs (Sympathomimetics) 46
- Adrenergic Antagonists 52

3. Drugs Acting on Musculoskeletal System **59**
- Skeletal Muscle Relaxants 59
- Drugs Used in the Treatment of Local Muscle Spasm 65
- Drugs Used in Other Musculoskeletal Diseases 65
- Drugs Used in the Treatment of Immunological and Inflammatory Neuromuscular Diseases 66
- Agents Affecting Bone Mineral Turnover 71
- Agents Used in the Prevention and Treatment of Osteoporosis 75
- Drugs and Exercise 75
- Sports Medicine and Drug Abuse in Sports 76

4. Anti-inflammatory Drugs and Immunopharmacology **79**
- Nonsteroidal Anti-inflammatory Drugs 79
- Corticosteroids 89
- Glucocorticoids 90

- Drugs Used in Treatment of Rheumatoid Arthritis 96
- Treatment of Gout 99
- Immunosuppressants and Immunostimulants 102

5. Drugs Acting on the Kidney **105**
- Diuretics and Antidiuretic Drugs 105
- Physiology of Urine Formation 105
- Diuretics 106
- Antidiuretics 110

6. Cardiovascular Pharmacology **112**
- Cardiac Glycosides and Treatment of Cardiac Failure 112
- Antiarrhythmic Drugs 116
- Antihypertensive Drugs 119
- Drugs Used in Ischemic Heart Disease 126
- Pharmacotherapy of Shock 131
- Plasma Expanders 132
- Vasoactive Drugs 133
- Cerebral Ischemia 134
- Drugs Used in Treatment of Peripheral Vascular Diseases 135
- Hypolipidemic Drugs 136
- Drugs Used in the Disorders of Coagulation 138
- Anticoagulants 139
- Thrombolytics (Fibrinolytics) 143
- Hematinics 147

7. Central Nervous System **150**
- Sedative Hypnotics 150
- Antiepileptics 154
- Drugs Used in Parkinsonism 161
- Opioid Analgesics and Antagonists 163
- Drugs Used in Psychiatric Disorders: Antipsychotics, Antidepressants and Antianxiety Agents 171
- CNS Stimulants 177
- General Anesthetics 179
- Local Anesthetics 182
- Alcohols 185

8. Autacoids and Respiratory System **187**
- Histamine and Antihistamines 187
- 5-Hydroxytryptamine, Ergot Alkaloids, Angiotensin and Kinins 190
- Eicosanoids 192
- Drugs Used in the Treatment of Bronchial Asthma 193
- Bronchodilators 194
- Drugs Used in the Treatment of Cough 198
- Drugs Used in Allergic Rhinitis 199

9. Gastrointestinal Tract **201**
- Drugs Used in Peptic Ulcer 201
- Prokinetic Agents 205

- Emetics and Antiemetics 206
- Drugs Used in the Treatment of Constipation 207
- Drugs Used in the Treatment of Diarrhea 210

10. Hormones **212**
- Hypothalamus and Anterior Pituitary Hormones 212
- Thyroid Hormones and Antithyroid Drugs 215
- Drugs Used in the Treatment of Diabetes Mellitus 216
- Androgens and Anabolic Steroids 224
- Estrogens, Progestins and Hormonal Contraceptives 227

11. Geriatric Pharmacology **234**
- Pharmacokinetic Changes 235
- Pharmacodynamic Changes 236
- Adverse Reactions in the Elderly 237
- Criteria for Safe Prescribing in the Elderly 237
- Dementia 238
- Drugs Used in Alzheimer's Disease 238

12. Chemotherapy **239**
- Sulfonamides 243
- Cotrimoxazole 245
- Quinolones 247
- Beta-lactam Antibiotics 248
- Aminoglycosides 254
- Broad-spectrum Antibiotics 256
- Macrolides and Other Antibacterial Agents 259
- Chemotherapy of Urinary Tract Infections 263
- Chemotherapy of Tuberculosis 264
- Chemotherapy of Leprosy 267
- Antifungal Drugs 268
- Antiviral Drugs 271
- Antiprotozoal Drugs 275
- Antiamebic Drugs 277
- Drugs Used in Leishmaniasis 278
- Anthelmintics 279
- Cancer Chemotherapy 281
- Vaccines and Antisera 286

Index ***289***

3
CHAPTER

Drugs Acting on Musculoskeletal System

JAYPEE BROTHERS

CHAPTER HIGHLIGHTS

- Skeletal Muscle Relaxants
- Drugs Used in the Treatment of Local Muscle Spasm
- Drugs Used in Other Musculoskeletal Diseases
- Drugs Used in the Treatment of Immunological and Inflammatory Neuromuscular Diseases
- Agents Affecting Bone Mineral Turnover
- Agents Used in the Prevention and Treatment of Osteoporosis
- Drugs and Exercise

SKELETAL MUSCLE RELAXANTS

Skeletal muscle relaxants (SMR) are drugs that reduce the muscle tone either by acting peripherally at the neuromuscular junction (neuromuscular blockers) or centrally in the cerebrospinal axis or directly on the contractile mechanism. They reduce the spasticity in a variety of neurological conditions and are also useful in surgeries.

Classification

Classification of skeletal muscle relaxants—*see* Flowchart 3.1.

Peripherally Acting Skeletal Muscle Relaxants

Neuromuscular Blockers (NMB)

Competitive Blockers

Curare was used by the South American Indians as arrow poison for hunting wild animals because curare paralyzed the animals. On extensive research, the active principle from curare, **tubocurarine** was identified. d-tubocurarine (d-Tc) is the dextrorotatory

Flowchart 3.1: Classification of skeletal muscle relaxants.

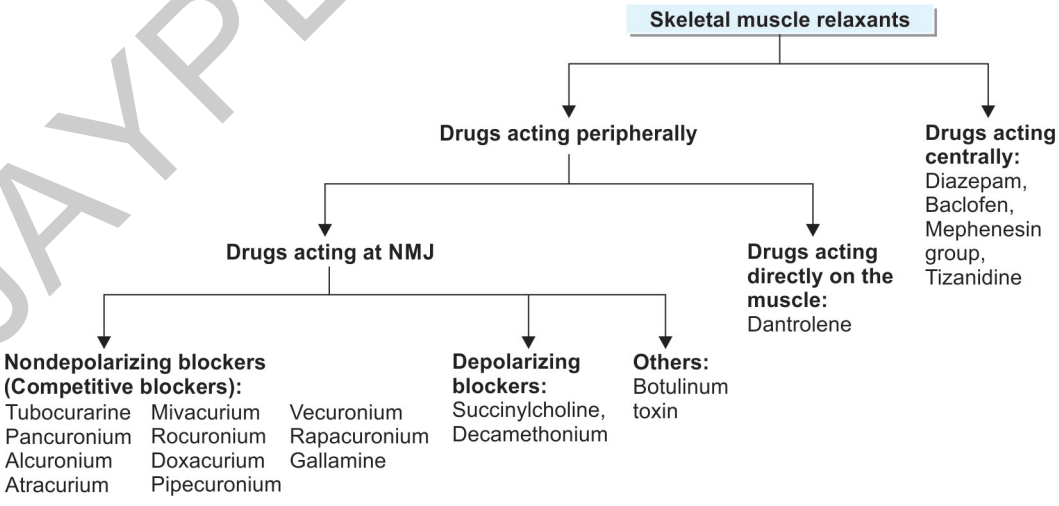

quaternary ammonium alkaloid obtained from the plant *Chondrodendron tomentosum* and plants of the *Strychnos* species (l-tubocurarine is less potent). Several synthetic agents have been developed. All these are quaternary ammonium compounds, because of which they are not well absorbed and are quickly excreted.

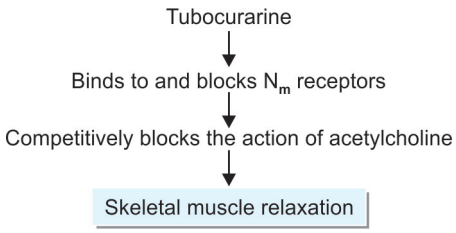

Table 3.1: Duration of action of competitive neuromuscular blockers.

Drug	*Duration (min)*
Tubocurarine	35–60
Gallamine	35–60
Pancuronium	35–80
Doxacurium	90–120
Atracurium	20–35
Vecuronium	20–35
Mivacurium	12–18
Pipecuronium	80–100
Rapacuronium	15–30
Rocuronium	30–60

Mechanism of Action

Non-depolarizing blockers bind to nicotinic receptors on the motor end plate and block the actions of acetylcholine by competitive blockade (Fig. 3.1). These compounds slowly dissociate from the receptors and transmission is gradually restored. Thus, their action is reversible.

Tubocurarine Pharmacological Actions

Skeletal muscle: On parenteral administration, tubocurarine initially causes muscular weakness followed by flaccid paralysis. Small muscles of the eyes and fingers are the first to be affected, followed by those of the limbs, neck and trunk. Later the intercostal muscles and finally the diaphragm are paralyzed and respiration stops. **Consciousness is not affected throughout.** Recovery occurs in the reverse order, i.e., the diaphragm is the first to recover. The effect lasts for 30–60 minutes (Table 3.1).

Autonomic ganglia: In high doses tubocurarine can block autonomic ganglia and adrenal medulla resulting in hypotension.

Histamine release: Tubocurarine can cause histamine release the mast cells from leading to bronchospasm, increased salivary, tracheobronchial and gastric secretions and this also contributes to hypotension.

Pharmacokinetics

Tubocurarine is a quaternary ammonium compound—hence not absorbed orally. It is given either IM or IV.

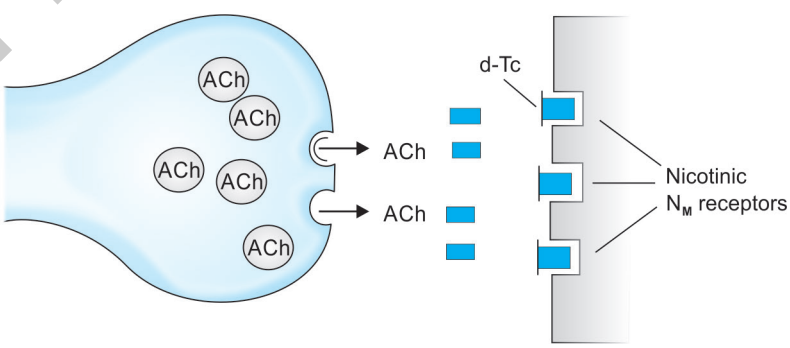

Fig. 3.1: d-Tc molecules bind to nicotinic receptors and prevent the binding of ACh on these receptors

JAYPEE BROTHERS

Adverse Reactions

1. Respiratory paralysis and prolonged apnea. It should be treated with artificial ventilation. Neostigmine reverses the skeletal muscle paralysis.
2. Hypotension due to ganglion blockade and histamine release.
3. Flushing and bronchospasm due to histamine release by tubocurarine; this is not seen with newer agents.

Treatment of toxicity: Neostigmine and edrophonium may be used to reverse the skeletal muscle paralysis and are the antidotes in curare poisoning. Antihistamines should be given to counter the effects of histamine.

Sugammadex, a newly introduced antidote binds to rocuronium and reverses its effects. The complex is excreted in the urine. It can also chelate other NMBs like vecuronium and pancuronium.

Synthetic Competitive Blockers

Pancuronium, atracurium, vecuronium, gallamine, doxacurium, mivacurium, pipecuronium, rapacuronium, rocuronium (Table 3.1) are synthetic competitive blockers. The synthetic compounds have the following **advantages over tubocurarine**.

- Less/no histamine release.
- Do not block autonomic ganglia hence cause less hypotension.
- Spontaneous recovery takes place with most of these drugs.
- Some are more potent than tubocurarine.
- **Atracurium** can be safely used in patients with renal impairment because it is degraded by spontaneous rearrangement of the molecule called Hoffmann elimination and also by plasma esterases and therfore does not depend on the kidney for elimination.

  The newer agent **rocuronium** has a rapid onset of action. Hence they can be used as alternative to succinylcholine (SCh) for muscle relaxation before endotracheal intubation. Rocuronium does not cause hypotension,tachycardia and is fast acting. Rapacuronium which is also rapid acting is withdrawn due to severe bronchospasm.
- Tubocurarine, doxacurium and gallamine have a slow onset (4–5 minutes) but long duration of action; pancuronium, vecuronium, atracurium and mivacurium have intermediate onset (2–4 minutes) while rocuronium has fast onset of action (1–2 minutes).
- **Mivacurium** is rapidly metabolized by plasma cholinesterases—hence short acting. It causes significant histamine release.
- Tubocurarine causes histamine release, ganglion blockade (resulting in hypotension) and its muscle relaxant effect needs to be reversed with drugs. Hence **tubocurarine is not used now**. The synthetic compounds are used.

Depolarizing Blockers

Succinylcholine (SCh, Suxamethonium) is a quaternary ammonium compound with the structure **resembling two molecules of acetylcholine joined together**.

Mechanism of Action

The neuromuscular effects of SCh are like those of ACh because of its structure. SCh reacts with nicotinic receptors (Flowchart 3.2) and depolarizes the skeletal muscle membrane. But, unlike ACh, it is destroyed very slowly by pseudocholinesterase. Thus continued presence of the drug causes persistent depolarization resulting in flaccid paralysis. This is phase I block. In high doses SCh produces a dual block—initial depolarizing block followed by non-depolarizing block. The membrane gets slowly repolarized but cannot be depolarized again. The mechanism of this phase II block is not clearly known.

Pharmacological Actions

Skeletal muscle: On intravenous administration onset of action is very rapid—

JAYPEE BROTHERS

Flowchart 3.2: Mechanism of action of succinylcholine.

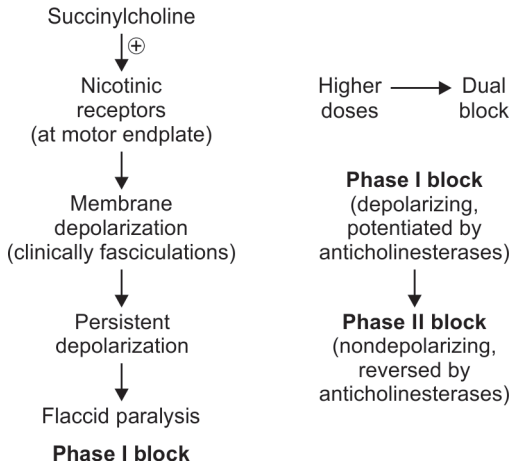

within 1 minute. Initial transient muscular fasciculations and twitchings, mostly in the chest and abdominal regions are followed by skeletal muscle paralysis. The fasciculations are maximum in 2 minutes and subside in 5 minutes. It is due to stimulation of the muscle fibers by a discharge of action potentials in them. SCh is a short-acting muscle relaxant and the effect lasts for 5–10 minutes. Hence it has to be given continuously as an infusion for longer effect.

CVS: Initially hypotension and bradycardia may result from stimulation of the nicotinic receptors in vagal ganglia. This is followed by tachycardia and hypertension due to stimulation of sympathetic ganglia. Higher doses can cause cardiac arrhythmias. SCh can also cause histamine release if injected rapidly.

Other effects: SCh can cause hyperkalemia as it triggers the release of K^+ from the cells by increasing the permeability to cations. It can also cause a transient increase in intraocular pressure.

Pharmacokinetics

SCh is rapidly hydrolyzed by pseudocholinesterases—hence it is short-acting (about 5 minutes). Some people (1 in 2000) have an **abnormal pseudocholinesterase**, a hereditary defect; SCh does not get metabolized and even the usual dose results in **prolonged apnea** and paralysis which may last for several hours. Artificial ventilation and fresh blood transfusion to supply pseudocholinesterase are needed.

Adverse Reactions

1. **Postoperative muscle pain** is a common adverse effect of SCh. It may be due to the damage to muscle fibers that occurs during initial fasciculations.
2. **Hyperkalemia:** This may result in cardiac arrest in patients with burns and nerve injuries.
3. **Cardiac arrhythmias:** SCh can cause cardiac arrhythmias.
4. **Malignant hyperthermia:** It is a rare genetically determined condition where there is a sudden increase in body temperature and severe muscle spasm due to release of intracellular Ca^{++} from the sarcoplasmic reticulum. Certain drugs like halothane, isoflurane and succinylcholine can trigger this process which can be fatal. Combination of halothane and SCh is the most common triggering factor. Intravenous dantrolene is life-saving in malignant hyperthermia. Oxygen inhalation and immediate cooling of the body also help.
5. **Succinylcholine apnea** can be a serious adverse effect in people with atypical/abnormal pseudocholinesterase. People belonging to some particular communities (like vysyas and chettiars) are known to inherit this abnormal pseudocholinesterase.

Drug Interactions

1. General anesthetics augment the action of SMRs.
2. Anticholinesterases like neostigmine—reverse the action of competitive blockers.
3. Aminoglycosides and calcium channel blockers potentiate the action of SMRs.

JAYPEE BROTHERS

4. Succinylcholine and halothane given together increase the risk of malignant hyperthermia.

Uses of Peripherally Acting Skeletal Muscle Relaxants

Inappropriate use of peripherally acting SMRs can be fatal. Hence they should be given only by qualified anesthetists or adequately trained doctors.

1. **Adjuvant to anesthesia:** Adequate muscle relaxation is essential during surgeries. Skeletal muscle relaxants are used as adjuvants to general anesthesia. Short-acting SMRs like succinylcholine is used during endotracheal intubation. SMRs are also useful in laryngoscopy, bronchoscopy, esophagoscopy and in orthopedic procedures like reduction of fractures and dislocations.
2. **In electroconvulsive therapy (ECT):** SMRs protect the patient from convulsions and trauma during ECT.
3. **In spastic disorders:** SMRs are used to overcome the spasm of tetanus, athetosis and status epilepticus.
4. **In minor procedures:** SMRs are also useful in laryngoscopy, bronchoscopy, esophagoscopy, tracheal intubation and in orthopedic procedures like reduction of fractures and dislocations.
5. **In status epilepticus:** When convulsions cannot be controlled by anticonvulsants alone, sometimes a neuromuscular blocker (NMB) is used to control the muscular component of convulsions. However, they do not cross the blood brain barrier (BBB) and have no central effects.
6. **Patients on ventilator:** To reduce the resistance of the chest wall and enhance thoracic compliance and to facilitate artificial ventilation, NMBs are used in intensive care units.

Directly Acting Muscle Relaxants

Dantrolene directly affects the skeletal muscle contractile mechanism. It inhibits the muscle contraction by preventing the calcium release from the sarcoplasmic reticulum.

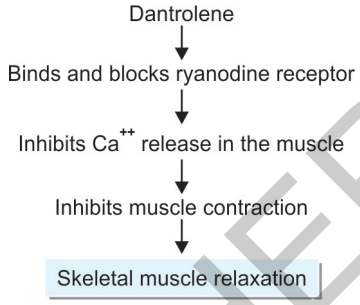

Adverse effects include drowsiness, dizziness, fatigue, muscle weakness, diarrhea and rarely hepatotoxicity. Liver function tests should be done to look for hepatotoxicity.

Uses

1. **Spastic disorders:** Dantrolene is used in spastic disorders like hemiplegia, paraplegia, spinal injuries, multiple sclerosis and cerebral palsy.
2. **Malignant hyperthermia:** Dantrolene is the drug of choice in malignant hyperthermia which is due to excessive release of calcium from the sarcoplasmic reticulum. Dantrolene blocks the release of Ca^{++} from the sarcoplasmic reticulum and relieves muscle spasm in malignant hyperthermia.
3. **Malignant neuroleptic syndrome**—dantrolene is found to be useful.

Quinine: The antimalarial quinine is a skeletal muscle relaxant. It is a sodium channel blocker, it reduces the excitability of the motor end plate. Quinine is used in myotonia congenita and in nocturnal muscle cramps.

Botulinum toxin (BOTOX) is produced by the anerobic bacterium *Clostridium botulinum*. The toxin inhibits the release of acetylcholine at the cholinergic synapses resulting in flaccid paralysis of skeletal muscles.

Botulinum toxin is useful (local injection) in the treatment of dystonias, including sports or writer's cramps, muscle spasms, tremors, cerebral palsy and in rigidity seen

JAYPEE BROTHERS

in extrapyramidal disorders. It is commonly used to relieve blepharospasm. Botulinum toxin is also popular in cosmetic therapy to remove facial lines by local injection.

Centrally Acting Muscle Relaxants

These drugs act on higher centers and cause muscle relaxation without loss of consciousness. They also have sedative properties. Drugs in this category are:

- **$GABA_A$ agonists:** Benzodiazepines like diazepam
- **$GABA_B$ agonist:** Baclofen
- **Central alpha-2 agonist:** Tizanidine
- **Others:** Mephenesin, carisoprodol, methocarbamol, thiocolchicoside, riluzole, gabapentin, progabide.

Mechanism of action: Centrally acting muscle relaxants depress the spinal polysynaptic reflexes. These reflexes maintain the muscle tone. By depressing these spinal reflexes, centrally acting SMRs reduce the muscle tone.

Central muscle relaxants
↓
Depress spinal polysynaptic reflexes
↓
Decrease muscle tone

Centrally acting muscle relaxants include:

Benzodiazepenes like diazepam have useful antispastic activity. They can be used in relieving muscle spasm of almost any origin including local muscle trauma (*See* page 151).

Baclofen is an analog of the inhibitory neurotransmitter GABA. It is a GABA agonist—it depresses the monosynaptic and polysynaptic reflexes in the spinal cord. It relieves painful spasms including flexor and extensor spasms and may also improve bladder and bowel functions in patients with spinal lesions. Normal tendon reflexes and voluntary muscle power are not affected. Baclofen is generally given orally.

Baclofen is also useful in reducing craving in deaddiction of chronic alcoholics.

Baclofen ($GABA_B$ agonist)
↓
Activates $GABA_B$ receptors
↓
Depresses monosynaptic and polysnaptic reflexes in the spinal cord
↓
Muscle relaxation

Side effects are drowsiness, weakness and ataxia. Baclofen should be gradually withdrawn after prolonged use because abrupt withdrawal can cause anxiety, palpitations and hallucinations.

Mephenesin is not preferred due to its side effects. A number of related drugs like **carisoprodol, methocarbamol, chlorzoxazone** are used in acute muscle spasm caused by local trauma. All of them also cause sedation.

Tizanidine is a congener of clonidine. It is a central α_2 agonist like clonidine. It increases presynaptic inhibition of motor neurons and reduces muscle spasms. Adverse effects include drowsiness, weakness, hypotension and dry mouth. Tizanidine is used in the treatment of spasticity due to stroke, multiple sclerosis and amyotropic lateral sclerosis.

Other centrally acting spasmolytic agents include **riluzole, gabapentin** and **progabide**. Riluzole has both presynaptic and postsynaptic effects. It inhibits glutamate release in the CNS. It is well tolerated with minor adverse effects like nausea and diarrhea. It is used to reduce spasticity in amyotropic lateral sclerosis.

Uses of Centrally Acting Muscle Relaxants

1. **Musculoskeletal disorders** like muscle strains, sprains, myalgias, torticollis, cervical root syndromes, herniated disc syndromes, low backache, dislocations, arthritis, fibrositis and bursitis all cause painful muscle spasms. Muscle relaxants are used with analgesics in these.
2. **Spastic neurological disorders** like cerebral palsy, multiple sclerosis, poliomyelitis, hemiplegia and quadriplegia are treated with diazepam or baclofen.

JAYPEE BROTHERS

3. **Tetanus:** Diazepam is given IV.
4. **ECT:** Diazepam is given along with peripherally acting SMRs.
5. **Orthopedic procedures** like fracture reduction may be done after administering diazepam.

DRUGS USED IN THE TREATMENT OF LOCAL MUSCLE SPASM

Several agents are used for the treatment of local muscle spasms which may result from injury or strain. They are:

- Cyclobenzaprine
- Metaxalone
- Carisoprodol
- Chlorzoxazone
- Meprobamate
- Methocarbamol.

They have the following common features:

- All these drugs act by depressing spinal polysynaptic reflexes.
- Common adverse reactions include drowsiness and dizziness.
- Cyclobenzaprine has anticholinergic effects and can therefore cause dryness of mouth, drowsiness and dizziness.
- Many of them are available in combination with NSAIDs.
- NSAIDs are also effective in relieving muscle spasms.

DRUGS USED IN OTHER MUSCULOSKELETAL DISEASES

1. **Osteomalacia and rickets:** Vitamin D deficiency results in osteomalacia. Vitamin D (*See* page 73) is used for the prevention and treatment of osteomalacia.
2. **Paget's disease:** It is due to abnormal osteoclastic activity which results in altered bone architecture. NSAIDs, calcitonin and bisphosphonates are used. Analgesics reduce pain while calcitonin and bisphosphonates reduce bone resorption.
3. **Osteoarthritis:** NSAIDs and glucocorticoids are used.
4. **Drugs used in spasticity:** Spasticity is due to hypertonic contraction of the skeletal muscles. Spasticity is seen in cerebral palsy, stroke and multiple sclerosis. Drugs used in spasticity include baclofen, diazepam and dantrolene.
5. **Amyotropic lateral sclerosis:** Amyotropic lateral sclerosis is a rapidly progressive motor neuron disorder that is characterized by damage to motor neurons of the ventral horn of the spinal cord that control the voluntary muscles. Manifestations include progressive muscle weakness, atrophy, fasciculations and spasticity. Both upper and lower motor neurons are affected. Till now, it was treated symptomatically—for example, muscle relaxants, like baclofen, are used for spasticity. The only drug that was recently made available for the treatment of ALS in riluzole.

   Riluzole blocks the sodium channels and calcium channels. It is an NMDA/glutamate receptor antagonist. It has been shown to increase survival in ALS patients. It is orally effective, highly protein bound and given 50 mg BD. It is well-tolerated. Nausea, diarrhea and rarely hepatotoxicity are noted.

   Ginkgo biloba: An extract of the Chinese plant contains ginkgoflavon glycosides. It is thought to act as a PAF antagonist and decreases the production of TXA and inhibits platelet aggregation. It has been used as a cognition enhancer—but the benefits have yet to be proved.

   Ginkocer, ginkoba 40 mg tab.
6. **Other muscular disorders:** Some muscular disorders like congenital myotonia, Lambert-Eaton syndrome, McCardle syndrome and tetany are due to impaired neuromuscular transmission.
   - **Congenital myotonia** is characterized by violent muscle spasm, which results from irritability of the muscle fiber membrane. Membrane stabilizing

JAYPEE BROTHERS

agents like phenytoin and quinine are found to be useful in this condition.

- **Lambert-Eaton syndrome** is characterized by muscular weakness and easy fatiguability. It is associated with some cancers like lung cancer. Physical exercise and calcium are found to be useful in improving muscle power.
- **McCardle syndrome** in some people, glycogen cannot be converted to glucose in the muscle due to an enzyme deficiency. Hence after some exercise such persons develop severe muscle weakness, stiffness and pain. It can be treated with large doses of glucose or by adrenaline injection, which releases glucose from the liver.
- **Tetany:** Hypocalcemia results in tetany and increased neuromuscular excitability. Calcium salts should be given orally or in more severe cases intravenously (*See* page 71).

DRUGS USED IN THE TREATMENT OF IMMUNOLOGICAL AND INFLAMMATORY NEUROMUSCULAR DISEASES

1. Myasthenia Gravis

Myasthenia gravis is a chronic autoimmune disease characterized by progressive weakness with rapid and easy fatiguability of the skeletal muscles. Anticholinesterases improve muscle strength by enhancing the amount of ACh released during each nerve impulse. Antibodies to nicotinic receptors are formed which destroy these receptors, resulting in a decrease in the number of these receptors at the neuromuscular junction (NMJ).

Treatment

Edrophonium is used IV for the diagnosis. Treatment with anticholinesterases bring about improvement in muscle strength. Neostigmine (15 mg tab 6 hourly) or pyridostigmine or a combination of these two may be given. AntiChEs increase ACh levels at the NMJ by preventing the destruction of ACh. They thus increase the force of contraction and improve muscle power by more frequent activation of the existing nicotinic receptors.

Neostigmine in Myasthenia gravis

- By AntiChE activity, it increases ACh levels at the NMJ.
- In addition, neostigmine directly stimulates the nicotinic receptors
- It also increases the amount of ACh released during each nerve impulse.

In advanced disease, anticholinesterases are not effective because the available nicotinic receptors are very few.

Factors like infection, surgery and stress can result in severe muscle weakness called–**myasthenic crisis**. But severe weakness may also result from an excess dose of an anticholinesterase drug (flaccid paralysis due to more of acetylcholine) called **'cholinergic crisis'**. These two crises can be differentiated by 2 mg IV edrophonium—the patient immediately improves if it is myasthenic crisis but the weakness worsens if it is cholinergic crisis. Treatment of cholinergic crisis is with atropine while myasthenic crisis requires a higher dose of an alternative anticholinergic drug.

Other drugs used in myasthenia gravis are:

- **Glucocorticoids:** They inhibit the production of antibodies to the nicotinic receptors. These are used when anticholinesterases alone are not adequate.
- **Immunosuppressants:** Azathioprine and cyclosporine can be used as alternatives to prednisolone in advanced myasthenia gravis. They inhibit the production of antinicotinic receptor antibodies.



JAYPEE BROTHERS

2. Idiopathic Inflammatory Myopathies

Inflammatory myopathies (IM) are inflammatory disorders of the skeletal muscle characterized by symmetric muscle weakness of proximal muscles of the limbs and rarely neck and pharyngeal muscles. These could be accompanied by polymyositis and dermatomyositis. The etiology is not known but toxins and infections may be involved. Inclusion body myositis is a type of inflammatory myopathy with frequent episodes of distal muscle weakness. In biopsy of the muscle, unique inclusions are seen in the muscle.

Treatment is to suppress inflammation.

Drugs used are:

- Glucocorticoids
- Immunosuppressive agents
- Hormone replacement therapy in postmenopausal women
- Physiotherapy.

Glucocorticoids are the first line drugs because they suppress inflammation. Prednisolone is started in the dose of 1–2 mg/kg/day in 2–3 divided doses. A gradual improvement in grip strength may be noticed. However, this condition is slow to respond and some may take as long as 3 months. Once the response is established, a lower maintenance dose is effective to prevent steroid-induced osteoporosis. Daily dietary supplements of calcium and vitamin D should be given, guided by screening of bone mineral density.

Immunosuppressive agents: Patients who do not respond to steroids or poorly tolerate steroids may be put on immunosuppressive agents. Azathioprine, methotrexate, mercaptopurine, cyclophosphamide and cyclosporin are all found to be effective. Immunoglobulins given intravenously appear to be useful in patients not responding to the above measures.

Hormone replacement therapy: Postmenopausal women may need hormone replacement therapy.

Physiotherapy plays a vital role in the treatment. Patients should be advised bed rest during periods of active inflammation. A daily exercise program should be designed to include passive stretching. This avoids muscle contractures. Reasonable active exercises should be encouraged. Training the use of inspiratory muscles can be of benefit for patients with inspiratory muscle weakness.

Other facilitatory measures like grip bars, raised toilet seats, walking aids can also be of help.

3. Demyelinating Disease

Demyelinating disease could be acute inflammatory demyelinating polyneuropathy [Guillain-Barré (GB) syndrome] or chronic inflammatory demyelinating disease.

Acute demyelinating disease is a motor neuropathy which develops over 1–4 weeks after respiratory infection or diarrhea. Microorganisms commonly involved are *Campylobacter jejunum* and cytomegalovirus. Cell mediated immune response is directed at the myelin protein of the spinal roots and cranial nerves. This results in the release of inflammatory mediators viz cytokines which block nerve conduction and complement mediated destruction of the myelin sheath and associated axon.

Clinical features include prodromal symptoms with headache, vomiting, fever, pain in the back and limbs. After a few days, the stage of paralysis begins with distal paresthesias, rapidly ascending muscle weakness, facial and bulbar weakness, (ophthalmoplegia) and in some patients weakness of the respiratory muscles. Involvement of head and neck muscles causes dysphagia. Sensory symptoms with pain, tingling and numbness of the limbs, tenderness in the muscles, cranial nerve paralysis, depressed or loss of reflexes and sometimes urinary retention are also seen.

Nerve conduction studies done in the first few days show prolonged distal motor

JAYPEE BROTHERS

latencies in the limbs, prolonged F wave latencies and action potential amplitudes are small. Later stages show slowing of nerve conduction which indicates demyelination.

By about 3 weeks, quadriparesis and respiratory paralysis may develop. However majority recover with minor residual neurological symptoms.

Treatment

- Analgesics like paracetamol or ibuprofen and hot packs for pain.
- Regular respiratory monitoring-assisted respiration if required.
- Glucocorticoids may be tried in patients with severe weakness or bulbar involvement—but not shown to be useful by studies.
- Physiotherapy—early active and passive movements.
- In more severe cases plasma exchange may be needed.
- Intravenous immunoglobulin therapy may be given to shorten the course of illness.

Acute axonal polyneuropathy: It is an axonal variant of GB syndrome with antibodies to peripheral nerve gangliosides. It could also result from exposure to certain drugs and toxins.

Miller-Fisher syndrome: It is a variant of Guillain-Barré syndrome with ataxia, areflexia and ophthalmoplegia.

Chronic inflammatory demyelinating polyneuropathy: It develops over months (usually two months) or years. It could be due to an aberrant immune response leading to chronic GB syndrome or hereditary type. Several abnormal gene types have been shown to result in hereditary demyelinating peripheral neuropathies (known as Charcot-Marie-Tooth (CMT) disease). This condition is characterized by distal wasting, i.e., the legs resemble an inverted champagne bottle or the legs of a 'stork'.

Chronic inflammatory demyelinating peripheral neuropathy manifests as progressive generalized neuropathy with predominantly motor symptoms. Treatment is with immunosuppressants, plasma exchange and immunoglobulins.

Chronic axonal polyneuropathy may be caused by drugs and toxins.

4. Osteoarthritis

Osteoarthritis (OA, osteoarthrosis) is a degenerative joint disease characterized by degeneration of articular cartilage and simultaneous proliferation of new bone. Pain is due to low grade inflammation of the joints resulting from abnormal wearing out of the cartilage and a decrease in synovial fluid. The word osteoarthritis is derived from the Greek words 'osteo' meaning 'of the bone' and 'arthritis' meaning joint. However, inflammatory changes in the synovium are usually minor. Though both men and women are affected, OA is more severe in older women. Osteoarthritis with no known etiology is called primary and when the cause for degenerative joint changes can be identified, it is known as secondary osteoarthritis. Genetic predisposition is known particularly in primary osteoarthritis.

Symptoms: Pain in the joints is the most common symptom. The joints affected may be those of the spine, hip, knees and hand—usually only one of these joints is involved. Onset of symptoms is gradual with sharp pain with the use of the joint. As the disease progresses, the joint movement becomes restricted, joints become stiff and the associated muscles go into spasm. There may be effusions into the joint, the surrounding muscles atrophy and the related ligaments may become lax. This associated muscle wasting is an important indicator of the duration and progress of the disease. 'Crepitus' may be felt or heard when the joint is touched or moved.

Treatment: The pathological changes in the joint are largely irreversible. Hence the aim of treatment is to reduce the pain

JAYPEE BROTHERS

and improve joint function. Analgesics like paracetamol help most patients. If the pain is severe, antiinflammatory doses of NSAIDs like ibuprofen, diclofenac or piroxicam may be needed. However, these are not to be used for long periods because of the risk of gastric ulceration, renal impairment and fluid retention.

Local: Intra-articular or periarticular injection of a glucocorticoid can relieve pain particularly in the knee. Intra-articular injection of hyaluronan or a local anesthetic like lignocaine can also afford temporary symptomatic relief. Local application of a gel of a NSAID like diclofenac or ibuprofen gel may be helpful and safe in most patients. Though drugs like tramadol and opioids may relieve pain in severe OA, they should be avoided for the risk of dependence. Their use must be restricted only to patients with severely painful joints and debilitating disease.

Other Drug Supplements

Several drugs have been tried:

a. **Glucosaminoglycan, pentosan polyphosphate and hyaluronan** - are shown to have a chondroprotective effect in the animals and in 'in vitro' experiments. Glucosamine is the precursor of glucosaminoglycan and chondroitin is the most abundant glucosaminoglycan in the cartilage. They help in the process of cartilage formation and repair. Dietary supplements of glucosamine and chondroitin sulfate have been tried in patients with OA. They are thought to improve the symptoms and delay the disease progression. However, clinical trials have not shown the combination of glucosamine and chondroitin to be anyway better than just placebo.

b. **Omega-3-fatty acids:** Dietary supplements of omega-3-fatty acids from certain marine fish have been tried in order to subdue the inflammatory process.

c. **Antioxidants:** Dietary supplements containing vitamin E are given for their antioxidant properties.

d. **Vitamin D:** Supplementation is recommended since many patients with OA have vitamin D deficiency.

Non-pharmacological Measures

Lifestyle modification to bring about a reduction in weight, regular exercises and rest to the affected joints, appropriate physiotherapy, relaxation techniques, mechanical devices to support the joint (like knee braces when knee is affected)—all these help in reducing morbidity to a large extent.

Surgery: If medical line of treatment is ineffective, surgery to remove the damaged fragments or in some cases joint replacement may be needed.

5. Systemic Lupus Erythematosus

Systemic lupus erythematosus (SLE) is a chronic autoimmune disease involving connective tissue characterized by the presence of antibodies leading to widespread tissue damage. Systemic lupus erythematosus is particularly common among Americans of African origin with a higher incidence in women (9:1).

The immune system regulation is impaired and the autoantibodies attack the host cells and tissue resulting in inflammation and tissue damage. Though not clear, the etiology of immunologically mediated tissue damage could be multifactorial including genetic, environmental (like Sunrays) hormones and drugs. SLE is a multi-system connective tissue disease affecting joints, skin, lungs, liver, heart, kidneys, blood vessels and nervous system.

Mucocutaneous manifestations include skin rashes (classic malar rash or butterfly rash), alopecia, livido reticularis, ulcers in the nose, mouth and vagina. Most patients experience joints pain with chronic inflammatory arthritis involving small joints

JAYPEE BROTHERS

of the hand and wrist though other joints may also be affected. However joint destruction is milder when compared to other types of arthritis. Migratory arthalgia with mild morning stiffness and tenosynovitis may be misdiagnosed as rheumatoid arthritis. However, unlike rheumatoid arthritis, joint deformities are rare in SLE.

Other features include anemia, lupus glomerulonephritis with hematuria and proteinuria; cardiorespiratory manifestations resulting from inflammation of various parts leading to pericarditis, endocarditis, myocarditis, atherosclerosis, fibrosing alveolitis, lupus pneumonitis, pulmonary hypertension and progressive dyspnea.

SLE can also manifest with esophagitis with pain during swallowing, malabsorption, lupus gastroenteritis, pancreatitis, hepatitis, cystitis and systemic vasculitis.

Treatment

Most patients have mild disease and would respond to NSAIDs. Hydroxychloroquine, glucocorticoids, immunosuppressants like methotrexate, azathioprine and cyclophosphamide may be needed for more severe cases.

Patients must be advised to avoid exposure to direct sun light, use sun protective clothing and sun block lotions containing sun protection factor 25–50. Weight reduction is recommended in overweight subjects. Patients who had earlier episodes of thrombosis should be put on life long warfarin.

6. Systemic Sclerosis (Scleroderma)

Systemic sclerosis is a chronic connective tissue disorder affecting the skin, internal organs and vasculature with excessive deposits of collagen in the skin or other organs. It was earlier called scleroderma. The characteristic clinical features include sclerodactyly with Raynaud's phenomenon. It is of two types:

1. **Systemic type:** The diffuse cutaneous systemic sclerosis which is the severe form.
2. **Localized type:** Limited cutaneous systemic sclerosis which is the localized type of the disease.

In the systemic form, most patients have vascular symptoms—**Raynaud's phenomenon** can lead to painful ulcers on the fingers and toes known as digital ulcers. Calcinosis near the elbows, knees and joints may restrict joint mobility particularly of the small joints. Arthralgia, morning stiffness, weakness and discomfort in the muscles and flexor tenosynovitis are the common musculoskeletal manifestations. It may be associated with pulmonary, gastrointestinal, renal and other complications.

Decreased gastric motility, gastric ulcers, upper gastrointestinal bleeding, scleroderma renal crisis with malignant hypertension, high renin levels, hematuria and proteinuria, pulmonary manifestations with pulmonary hypertension and in later stages pulmonary hemorrhage and pneumothorax can be seen.

Treatment

Depending on the organ/system involved, treatment is initiated to control the symptoms.

- Raynaud's phenomenon is treated with vasodilators (*See* page 134). Joints pain and myositis may be alleviated with NSAIDs.
- Infected ulcers need antibiotics. Poor penetration of drugs through skin lesions makes it necessary for drugs to be given in higher doses and for longer periods. Patients with severe ischemia and ulceration of the digits may be benefited by prostaglandin analogs epoprostenol or iloprost.
- Alveolitis, myositis and severe manifestations requiring immunosuppression may be treated with methotrexate, cyclosporine, cyclophosphamide or glucocorticoids. Scleroderma renal crisis with acute renal failure and severe hypertension can be given an ACE inhibitor like enalapril.

JAYPEE BROTHERS

- Maintenance of core body temperature is important to avoid Raynaud's phenomenon.

AGENTS AFFECTING BONE MINERAL TURNOVER

Calcium and phosphorus are the most important minerals of the bone with 1–2 kg of calcium and 1 kg of phosphorus stored in it. Calcium and phosphorus metabolism are chiefly regulated by vitamin D and parathormone and also by calcitonin. Vitamin D and parathormone increase plasma calcium levels but calcitonin reduces it. Other hormones that also influence calcium and phosphorus metabolism are growth hormone, insulin, thyroid hormone, prolactin, glucocorticoids and sex hormones.

Calcium

Calcium is essential for:

- Tissue excitability,
- Muscular excitation-contraction coupling,
- Secretion from glands,
- Myocardial contractility and
- Formation of bone and teeth.

It also maintains the integrity of mucous membranes and cell membrane.

Calcium is essential for normal blood coagulation.

Calcium is absorbed from the small intestine by a carrier mediated active transport. Normally about 30 percent of the dietary calcium is absorbed, while in Ca^{++} deficiency, the absorption increases under the control of vitamin D (Fig. 3.2). The normal plasma calcium level is 9–11 mg/dL. It is excreted in feces, urine and sweat.

Some preparations of calcium

Salt	Formulation	Dose
Calcium gluconate	10% inj—given IV 500 mg, 1 g tablets	10–20 mL
Calcium chloride	5–10% solution IV	5–10 mL

Adverse effects: Oral calcium can produce constipation.

Uses

- To prevent and treat calcium deficiency, calcium supplements are given orally in children, pregnant and lactating women and in postmenopausal osteoporosis to prevent calcium deficiency.

Tetany: 5–10 mL IV calcium gluconate followed by 50–100 mL slow IV infusion

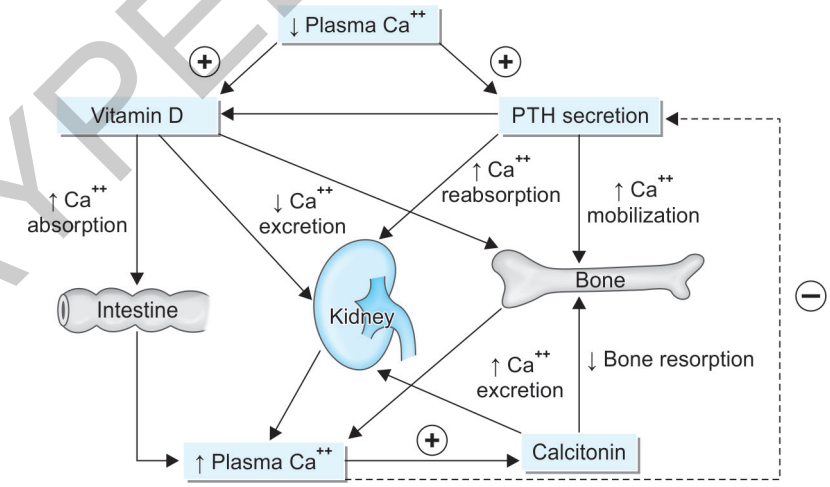

Fig. 3.2: Regulation of plasma calcium level

JAYPEE BROTHERS

for detailed information on physiotherapy books, visit our website www.jaypeebrothers.com, for detailed information on physiotherapy books, visit our webs

Pharmacology *for* Physiotherapy Students

Fourth edition of *Pharmacology for Physiotherapy Students* is the thoroughly revised and updated edition of the popular textbook. This book is known for its simplicity, easy language and clarity of writing. It covers all the topics as per the latest revised syllabus.

Highlights

- Matter thoroughly revised and organized
- More flowcharts and diagrams have been added to explain every important mechanism of action
- Student-friendly format followed
- Simple and easy to understand
- Text revision at most places is based on reviews by concerned super-specialists and subject experts
- Compare and contrast series makes the book complete
- Mnemonics have been added to help memorize the topics.

Padmaja Udaykumar MD is working as Professor and Head, Department of Pharmacology, Father Muller Medical College, Mangaluru, Karnataka, India. She is the President of National Association of Pharmacology and Therapeutics, a reputed body working for upliftment of pharmacology. She has a keen interest in medical education with an experience in teaching of more than 30 years and has been on the boards of studies of many universities. She has published several titles and this is her 25th book in the series of textbooks meant for medical, dental, nursing, physiotherapy and pharmacy students. She also has several research papers to her credit. She has rich experience in clinical pharmacology, conducted and coordinated several clinical trials, and has been advising clinicians on the appropriate and rational use of drugs.

Printed in India

Available at all medical bookstores
or buy online at www.jaypeebrothers.com

JAYPEE BROTHERS
Medical Publishers (P) Ltd.
EMCA House, 23/23-B, Ansari Road,
Daryaganj, New Delhi - 110 002, INDIA
www.jaypeebrothers.com

Join us on facebook.com/JaypeeMedicalPublishers

Shelving Recommendations
PHYSIOTHERAPY
PHARMACOLOGY

ISBN 978-93-5696-182-1