peebrothers.com, for detailed information on nursing books, visit our website www.jaypeebrothers.com, for detailed information on nursing books



Community Health Nursing Procedures

Baljit Kaur

2nd Edition

JAYPEE

Contents

Chapter 1: Home Visiting and Initiation of Rapport	1
Chapter 2: Conducting Community Needs Assessment	4
Chapter 3: Assessing Client's Age	7
Chapter 4: Handwashing	9
Chapter 5: Measuring Weight	12
Chapter 6: Measuring Height and Length	17
Chapter 7: Measuring Head and Chest Circumference	20
Chapter 8: Measuring Vital Signs	23
Chapter 9: Performing Urinalysis	30
Chapter 10: Estimating Hemoglobin Level by Telequest Scale	35
Chapter 11: Administration of Oral Polio Vaccine	38
Chapter 12: Administration of Vitamin A	40
Chapter 13: Purification of Water at Home	42
Chapter 14: Preparation of Oral Rehydration Solution (ORS)	45
Chapter 15: Preparing Malaria Parasite Slide	49
Chapter 16: Providing Hydrotherapy	52
Chapter 17: Providing Steam Inhalation	55
Chapter 18: Providing Antenatal Care	58
Chapter 19: Providing Postnatal Care	68
Chapter 20: Providing Breast Care	74
Chapter 21: Providing Perineal Care	77
Chapter 22: Performing Neonatal Assessment	80
Chapter 23: Cord Care of Neonate	87
Chapter 24: Eye Care of Neonate	89
Chapter 25: Giving Baby Bath	91
Chapter 26: Assisting Mother in Breastfeeding	94
Chapter 27: Under Six Assessment	98

Chapter 28: Inserting and Removing a 'Cu-T' **109**

Chapter 29: Health Assessment of an Adult **113**

Appendices

Appendix I: Calculating Body Mass Index (BMI) ***119***

Appendix II: Calculating Expected Date of Delivery (EDD) and Period of Gestation (POG) ***120***

Appendix III: Boiling Swabs for Clean Procedures ***121***

Appendix IV: Bag Technique ***122***

Appendix V: Mother and Child Protection Card ***126***

Index ***157***

8 CHAPTER

Measuring Vital Signs

Learning Objectives

- Describe the various methods for measuring temperature.
- Explain regarding assessment of pulse rate.
- Elucidate regarding the assessment of pulse rate.
- Elaborate the measurement of Blood pressure using Sphygmomanometer.

INTRODUCTION

Vital signs are also termed as cardinal signs reflecting the body's physiological status and providing information critical to evaluating homeostatic balance. Vital signs include four critical assessment areas, i.e.

1. Temperature
2. Pulse
3. Respiration
4. Blood pressure.

TEMPERATURE

It is measuring of the state of warmth or cold of human body with the help of a clinical thermometer.

Purpose

- To determine if the temperature is within normal range.
- To provide baseline for further evaluation.
- To determine alterations in disease conditions.

Points to Remember

- Every family should have a thermometer at home.
- Thermometer should be washed properly under running water.
- Don't use hot water for washing thermometer.
- Never leave the patient alone with thermometer in position.
- Read the thermometer at eye level.
- Never hold the thermometer by touching the bulb.
- Don't use the oral thermometer for rectal temperature.
- Take axillary temperature for children, old aged people and patients suffering from infectious diseases.
- Do not measure oral temperature within 10 minutes of eating or drinking anything by the patient.

JAYPEE BROTHERS

Articles (Figs. 8.1A and B)

- Oral glass and mercury thermometer or digital clinical thermometer.
- Alcohol swabs
- Dry swabs.

Steps of Procedure

1. Wash your hands **(***refer* **Chapter 4)**.
2. Checking temperature using clinical mercury thermometer:
   - Rinse thermometer in cold water.
   - Grasp thermometer with thumb and forefinger and shake vigorously by flicking the wrist in downward motion to lower down mercury to below 35–36°C.
   - Check temperature on thermometer.
   - Explain procedure to the patient.
   - Assist the patient to a comfortable position.
   - *For oral temperature:* Place the thermometer in patient's mouth under the tongue and ask the patient to keep lips closed. Leave thermometer in place for 2 minutes.
   - *For axilla temperature:* Place the tip of thermometer in the center of armpit and ensure that the axilla is dry. Leave in place for 4 minutes.
   - Remove the thermometer and wipe it down from stem to bulb in rotatory manner using dry cotton swab.
   - Hold the thermometer at eye level and read the temperature.
   - Shake the thermometer to lower down the temperature.
   - Clean the thermometer first with soap and water.
   - Let the thermometer dry and store it in a disinfected solution.
   - Record patient's temperature.
3. Checking temperature using digital clinical thermometer **(***see* **Figure 8.2)**:
   - Clean the tip of the thermometer with alcohol swab.
   - Turn the thermometer on and check the reading for display of Lo.

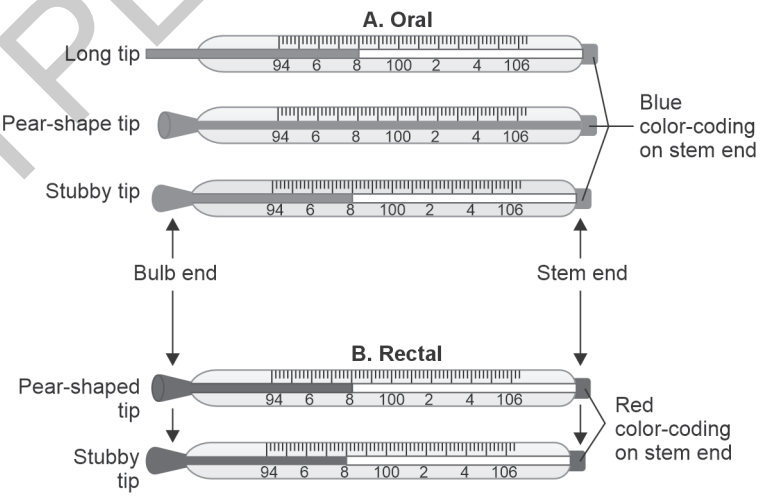

Figs. 8.1A and B: (A) Oral thermometer; (B) Rectal thermometer.

JAYPEE BROTHERS

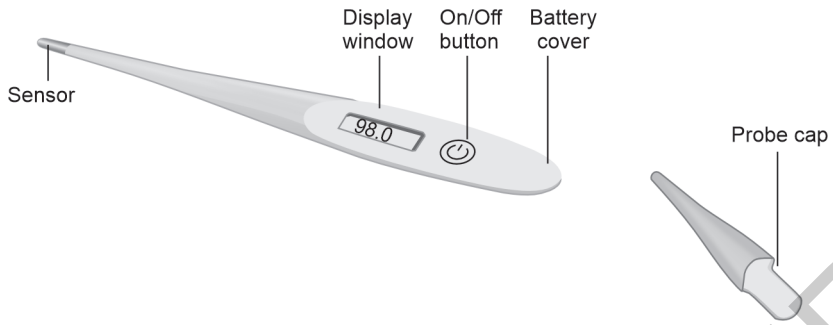

Fig. 8.2: Digital clinical thermometer.

- *For oral temperature:* Place the thermometer in patient's mouth under the tongue and ask the patient to keep lips closed. Wait until the beep sounds.
- *For axilla temperature:* Place the tip of thermometer in the center of armpit and ask the patient to hold until the beep sounds.
- Remove the temperature and check the reading on display.
- Clean the sensor of the thermometer using alcohol swab and let it dry.
- Cover the thermometer with the probe cap after dry.
- Record the temperature.

Conversion of Temperature from One Grade to Another

The two scales commonly used for measuring the temperature are Fahrenheit and Centigrade scales. The freezing point of water in these scales is 32°F and 0°C while the boiling point is 212°F and 100°C respectively. Thus, the temperature depicted by a Fahrenheit scale will be higher than the Centigrade scale. The following formula can be used to convert the two measurements as per requirement of the as per requirement of the community health nurse's convenience.

- $C = (F - 32) \times 5/9$
- $F = (C \times 9/5) + 32$

RADIAL PULSE

It is a vital sign depicting the functioning of the heart.

Articles

Wristwatch with second's hand.

Points to Remember

- If the patient is nervous wait till he/she has settled.
- Don't use thumb for counting the pulse because there is pulse in thumb which nurse could mistake for patient's pulse.
- Choose appropriate site **(Fig. 8.3)**, e.g., radial pulse for routine assessment of pulse, femoral and apical for cardiac emergency and pedal pulse for the patient with peripheral vascular disease.

JAYPEE BROTHERS

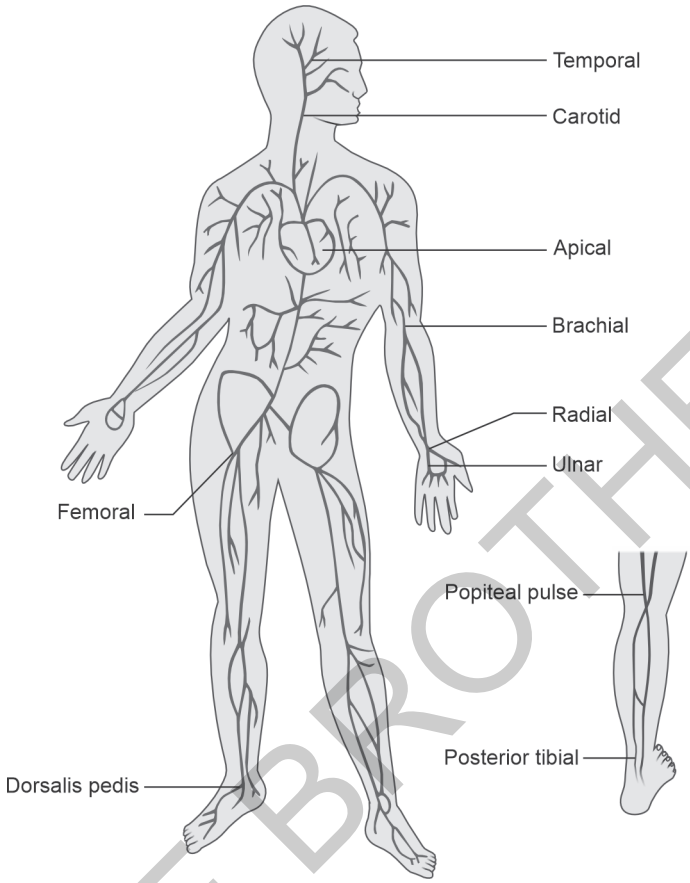

Fig. 8.3: Sites for taking pulse.

Steps of Procedure

1. Give explanation to the patient.
2. Wash your hands.
3. Place patient in comfortable position.
4. Ask about activity within last half an hour.
5. Using three fingers, i.e., proximal, middle and distal fingers **(Fig. 8.4)** to palpate the artery against the bone or underlying firm surface to occlude vessel and then gradually release pressure.
6. If rhythm is regular, count pulse for 30 seconds and multiply with 2 to obtain pulse rate.
7. If rhythm is irregular then count for one full minute.
8. Check to see that patient is comfortable.
9. Record pulse rate and rhythm.

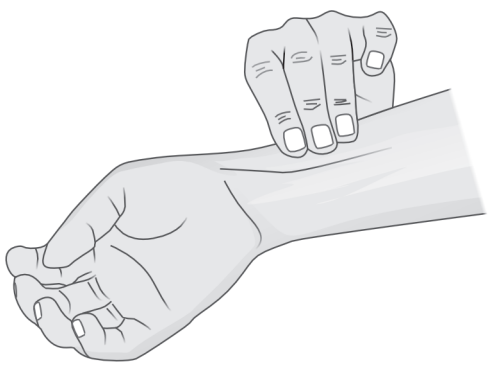

Fig. 8.4: Assessing pulse.

JAYPEE BROTHERS

RESPIRATION

It is a vital sign depicting the functioning of the lungs.

Purposes

- To note respiratory rate and rhythm.
- To establish baseline information.
- To note labored, difficult, or noisy respiration or cyanosis.
- To identify alterations in respiratory pattern resulting from disease process.

Points to Remember

- Never make patient conscious that you are counting his/her respiration.
- Count the respiration only.
- Never count the respiration when the patient is in tension.

Articles

Wristwatch with second's hand.

Steps of Procedure

1. Place hand on chest or observe chest rise and fall and count respiration.
2. Count respiration for 30 seconds and multiply by two.
3. Observe the respiratory pattern and depth of respiration.
4. Compare respiratory rate record with previous recordings if any.
5. Record respiratory rate, rhythm and/or depth altered from normal.

BLOOD PRESSURE

It is the measurement of pressure of the blood on the walls of the arteries.

Purpose

- To compare if arterial blood pressure reading is within normal range.
- To establish a baseline for further evaluation.
- To identify alterations in blood pressure resulting from change in disease condition.

Articles (Fig. 8.5)

- Sphygmomanometer with appropriate sized cuffs.
  - 12–14 cm wide for average adult arm.
  - Narrow cuff for infants, children and adults with thin arms.
  - Wider cuff of 18–20 cm for obese patients and for leg pressure readings.
- Stethoscope

Points to Remember

- Read the mercury reading at eye level when using manometer tube filled with mercury.
- Don't leave the cuff inflated for long time.
- Completely deflate the cuff before rechecking the blood pressure.

JAYPEE BROTHERS

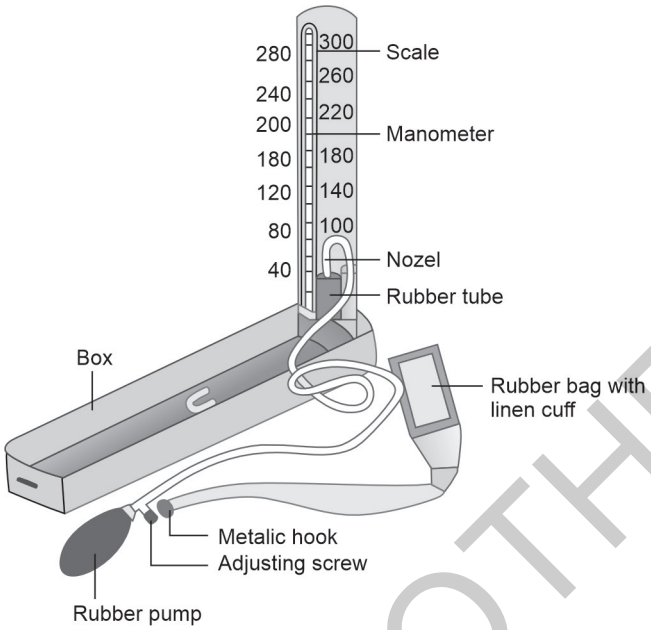

Fig. 8.5: Sphygmomanometer.

- Patient should be in resting position for at least 10 minutes, before measuring the blood pressure.
- Always turn the knob to off position when carrying the sphygmomanometer.

Steps of Procedure

1. Wash your hands.
2. Explain procedure to the patient.
3. Place patient in a relaxed lying or sitting position with arm at heart level. Expose upper part of patient's left arm.
4. Wrap cuff snugly and smoothly around patient's upper arm (about one inch above the antecubital space), with center of bladder over the brachial artery.
5. Palpate brachial artery with fingertips.
6. Place stethoscope on the medial antecubital fossa where brachial artery is felt.
7. Place stethoscope's earpieces in ears and listen for the thumping sound (pulsation) of blood against the artery wall.
8. Close valve on manometer pump.
9. Inflate cuff approximately 30 mm of mercury (Hg) above level at which pulsations are no longer heard **(Fig. 8.6)**.
10. Gradually deflate the cuff by opening valve of the pump (2–3 mm Hg/sec) until the first sound of pulse is heard. Note the level of reading on manometer. This is systolic blood pressure.
11. Continue to deflate the cuff gradually. Note when the Korotkoff's sound begins to get muffled and when it disappears completely. This is diastolic blood pressure.
12. Completely deflate the cuff and remove from patient's arm.
13. Make the patient comfortable.

JAYPEE BROTHERS



Fig. 8.6: Checking blood pressure.

14. Compare blood pressure readings with any previous readings.
15. Record the blood pressure readings.

After Care

1. Deflate the cuff completely, until mercury level falls to zero.
2. Roll the cuff and put in the box.
3. Switch the knob of the manometer to off position.

WRITE SHORT NOTES ON THE FOLLOWING

1. What is the other name for vital signs?
2. In which individuals we should not measure temperature by oral thermometer?
3. What is the normal range of pulse for an adult?
4. Before counting the respiration rate what precautions should community health nurse take?
5. When not in use why should the knob of sphygmomanometer be in OFF position?

JAYPEE BROTHERS

for detailed information on nursing books, visit our website www.jaypeebrothers.com, for detailed information on nursing books, visit our websit

Community Health Nursing Procedures

This book *Community Health Nursing Procedures* presents thorough and comprehensive nursing skills to be practiced at home and community settings by the students undergoing clinical community experience.

Salient Features

- The contents cover the basic and advanced community procedures.
- It is written in a simple and systematic way.
- A practical approach is given emphasis so that the students find it easy to comprehend and follow in their day-to-day clinical practice while working with their clients.
- Relevant images are illustrated for better understanding.
- Includes review questions at the end of each chapter.
- Special points to be taken care of are highlighted in boxes throughout.
- Useful for both graduate and postgraduate students.
- Helpful for students to incorporate theory into practice.

Baljit Kaur is as Professor and Principal at Bhai Gurdas Nursing College, Patiala, Punjab. She graduated in 1982 and did postgraduation in 1995 in Community Health Nursing, both from College of Nursing, PGIMER, Chandigarh, India. Her thesis in masters was adjudged the best thesis and was awarded 'Basanti Rai Award'. She did a PhD in Medical Sociology from Panjab University, Chandigarh in 2004. She has 11 years clinical and 15 years teaching experience in PGIMER, Chandigarh, along with 14 years' experience as Principal in various institutes including Army College of Nursing, Jalandhar.

The author has varied experiences as clinician, academician and researcher, during her career:

- Was investigator for "Mapping high-risk behaviour population for HIV/AIDS in Chandigarh" sponsored by IPHA and State AIDS control society of Chandigarh.
- Has published 25 articles in indexed journals.
- Organized 20 workshops on various nursing issues sponsored by the Ministry of Health and Family Welfare, New Delhi.
- Coordinated four 3-month short-term Midwifery courses at PGIMER, Chandigarh, sponsored by WHO.
- Organized First Aid and Home Nursing training for teachers at schools of Chandigarh, sponsored by St John Ambulance.
- Presented papers at 15 conferences and chaired 18 sessions at various conferences.
- Is in the panel of nursing examiners in 6 universities.
- Has been guide to more than 200 graduate, postgraduate and PhD nursing students.

Scan for more...

Printed in India

Available at all medical bookstores or buy online at www.ejaypee.com

JAYPEE BROTHERS
Medical Publishers (P) Ltd.
EMCA House, 23/23-B, Ansari Road,
Daryaganj, New Delhi - 110 002, INDIA
www.jaypeebrothers.com

Join us on facebook.com/JaypeeMedicalPublishers
Follow us on instagram.com/JaypeeMedicalPublishers

ISBN 978-93-5696-915-5