ailed information on biochemistry books, visit our website www.jaypeebrothers.com, for detailed information on biochemistry books, visit our website www.jaypeebrothers.com

Competency Based Practical Manual for Clinical Biochemistry

MBBS First Professional (Phase I)

As per the Competency-based Medical Education Curriculum (NMC)





Kapila Gaikwad
Gajanan Dhokikar

diginerve®
A Jaypee Initiative
• Video Lectures • Dr. Wise AI Chatbot
• Question Bank • Notes
Download App

JAYPEE

Contents

1. Introduction to Practical Biochemistry.....1

2. Biomedical Hazards and Waste Management.....2
- ♦ Hazards in Clinical Biochemistry Laboratory 4
- ♦ Safety Precautions in Laboratory 4

3. Good/Safe Laboratory Practices.....6
- ♦ Scope 6
- ♦ Levels of Laboratories 7
- ♦ Good Lab Practices 7

4. Laboratory Apparatus and Equipment..... 12
- ♦ Commonly Used Laboratory Glassware in the Undergraduate Biochemistry Laboratory 12
- ♦ Commonly Used Laboratory Apparatus in the Undergraduate Biochemistry Laboratory 12

5. pH Meter..... 30
- ♦ Measurement of pH by ABG Analyzer 31

6. Normal Urine..... 35
- ♦ Physical Properties of Normal Urine 35
- ♦ Tests for Inorganic Constituents of Urine 36
- ♦ Tests for Organic Constituents 37

7. Abnormal Urine 39
- ♦ Abnormalities of Physical Characteristics of Urine 39
- ♦ Chemical Tests 40

8. Urine Analysis by Dipstick Method 45
- ♦ Principle 45
- ♦ Procedure for Handling Urine Strips 46
- ♦ Specimen Collection and Preservation 46

9. Urine Report-1 49
- ♦ Proforma for Full Urine Report 49
- ♦ Proforma for Full Urine Report 51
- ♦ Proforma for Full Urine Report 52

10. Chromatography 56
- ♦ Principle 57
- ♦ Types of Chromatography 57
- ♦ Applications of Chromatography 59

Thin Layer Chromatography (TLC) 60
- ♦ Principle 60
- ♦ Working 60
- ♦ Application of Paper Chromatography 60
- ♦ Limitations of Paper Chromatography 61

11. Urine Screening for Inborn Errors 64
- ♦ Classification of Inborn Errors of Metabolism 68

12. Colorimetry and Spectrophotometry 76
- ♦ Colorimeter 76
- ♦ Spectrophotometer 79
- ♦ Difference Between Colorimeter and Spectrophotometer 80
- ♦ Experiment 1 80
- ♦ Experiment 2 81

13. Estimation of Glucose in Serum/Plasma/ Other Biological Fluids..... 85
- ♦ Methods of Blood Glucose Estimation 85
- ♦ Glycosylated Hemoglobin (HbA1C) 87

14. Glucometer..... 90
- ♦ Steps to Use Glucometer 90
- ♦ Principle 91
- ♦ Advantage 91
- ♦ Disadvantage 91
- ♦ POCT-Point of Care Testing/Bed-side Test 91

15. Estimation of Urea in Serum and Other Biological Fluids..... 94
- ♦ Methods of Urea Estimation 94
- ♦ Estimation of Blood Urea by Diacetyl Monoxime Method 95
- ♦ Urea Clearance Test 96

16. Creatinine..... 100
- ♦ Method of Serum Creatinine Estimation-Jaffe's Method 100
- ♦ Creatinine Clearance Test 102

17. Uric Acid 105
- ♦ Methods of Uric Acid Estimation 105

18. Protein and Albumin 112
- ♦ Estimation of Total Protein—Biuret Method 112
- ♦ Estimation of Serum Albumin by BCG Method (Bromocresol Green Binding Method) 113

19. Bilirubin..... 117
- ♦ Estimation of Bilirubin 117

20. SGOT (AST)/SGPT (ALT)/Alkaline Phosphatase..... 123
- ♦ Alanine Transaminase/ALT/SGPT/EC 2.6 1.2 123
- ♦ Aspartate Transaminase/ALT/SGPT/EC 2.6 1.1 125
- ♦ Estimation of Serum Alkaline Phosphatase (ALP, EC 3.1.3.1) 126

21. Total Cholesterol 131
- Method of Estimation-Zak's Method and Cholesterol Oxidase Peroxidase Enzymatic Method 131

22. Triglycerides, HDL and LDL 135
- Estimation of TAG by Enzymatic Method 135
- HDL Cholesterol 136
- Low-density Lipoprotein 137

23. Calcium and Phosphorus 143
- Method of Estimation-OCPC (O-Cresolphthalein Complexone) Method Procedure 143
- Method of Estimation—Fiske and Subbarow Method 146

24. Body Fluids and Cerebrospinal Fluid Analysis (CSF) 150
- CSF 150

25. Electrophoresis 153
- Electrophoretic Migration Depends on 153
- Types of Electrophoresis 153
- Apparatus 154
- Technique 155
- Applications 155
- Electrophoretogram of Plasma Proteins 156
- Limitations 157
- Principle/Working 158
- Steps 158
- Types of Page 159
- Application of Page 159
- Limitations 159

26. Auto-analyzer 162
- Semi-automated Discrete Analyzers 162
- Fully-automated Analyzers 163

27. Electrolyte Analysis by Ion Selective Electrode 168
- Principle 168
- Working 168
- Application 168
- Limitation 168
- Clinical Significance 169

28. ELISA 172
- Principle 172
- Procedure/Working 172
- Application 173
- Limitations 173

29. Immunodiffusion 176
- Principle 176
- Types 176
- Application 177
- Limitations 177

30. DNA Isolation from Blood/Tissue 181
- Procedure 181
- Application 182

31. Case Scenarios 185
Diabetes Mellitus 185
Obesity and Dyslipidemia 186
Fatty Liver 188
Myocardial Infarction 189
Renal Failure and Nephrotic Syndrome 190
Liver Diseases, Jaundice and Pancreatitis 191
Gout 194
Thyroid Disorders 195
Nutritional Disorders and Vitamin Deficiency Disorders 196
Mineral Metabolism 199
Electrolyte Metabolism and Acid Base Balance 200
Genetic Disorders 202

32. Errors in Clinical Biochemistry Laboratory 208
- Terms 209
- Errors Occurring in Each Phase 209

33. Quality Control 214
- Levey Jennings Chart (LJ Chart) 216
- Westgard Multi-rule Chart 217

34. Oral Glucose Tolerance Test, Glucose Challenge Test, and HbA1c 225
- Glucose Challenge Test 225
- Oral Glucose Tolerance Test 226
- American Diabetes Association 2024 Guidelines for Diagnosis of Diabetes 226
- Gestational Diabetes 226

35. Energy Content of Different Food Items 232
- Glycemic Index 233

36. Discharge Investigations 236
- Method 236

Lab Leaving Test ***238***

Written Assessment ***241***

Objective Structured Practical Examination ***242***

Spotting ***243***

Case Scenario ***244***

Appendix ***245***

CHAPTER 4

Laboratory Apparatus and Equipment

Competency Addressed:
BC14.1 Describe commonly used laboratory apparatus and equipment.

LO LEARNING OBJECTIVES

After reading this chapter, the readers should be able to:
Identify and describe the applications of commonly used laboratory apparatus and equipment.

COMMONLY USED LABORATORY GLASSWARE IN THE UNDERGRADUATE BIOCHEMISTRY LABORATORY

1. Conical flasks
2. Round bottom flask
3. Volumetric flask
4. Beaker
5. Funnel
6. Graduated cylinder
7. Reagent bottle
8. Pipette
9. Urinometer
10. Cuvette
11. Folin-Wu Tube

COMMONLY USED LABORATORY APPARATUS IN THE UNDERGRADUATE BIOCHEMISTRY LABORATORY

1. Balance: Electronic and analytical balance
2. Fume cupboard
3. Centrifuge
4. Boiling water bath and constant temperature water bath
5. Autoclave
6. Vortex mixture
7. Incubator
8. Hot air oven
9. Magnetic stirrer
10. Wash bottle
11. Flame photometer
12. Chromatography chamber
13. Water distillation plant
14. Desiccators
15. Ultraviolet lamp
16. Electrophoresis: Paper, PAGE (Polyacrylamide gel electrophoresis)
17. pH Meter
18. Colorimeter
19. Spectrophotometer
20. Semi and fully autoanalyzer
21. Densitometer

JAYPEE BROTHERS

Glassware

Most of the laboratories use glassware made of borosilicate as they are thermal and chemical resistant.

Conical Flask

Used to measure, mix and hold liquid reagents. They are also called Erlenmeyer Flask.

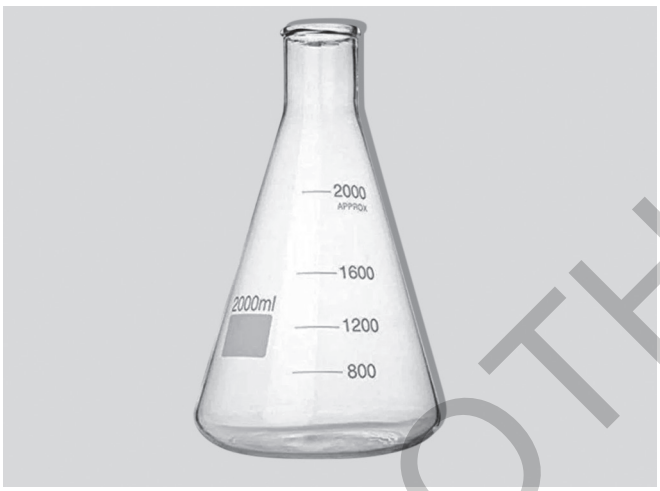

Conical flask

Round Bottom Flask

Used for heating, boiling during chemical reactions and have an incision on the neck to precisely define the volume of the flask.



Round bottom flask

Volumetric Flask

Used for measuring accurate volumes of liquid materials in the laboratory, used for dilutions and preparing standard solutions.

JAYPEE BROTHERS



Volumetric flask

Beaker—a Cylindrical Container with a Flat Bottom

It has small spout for pouring. A beaker is distinguished from a conical flask by having straight rather than sloping sides.

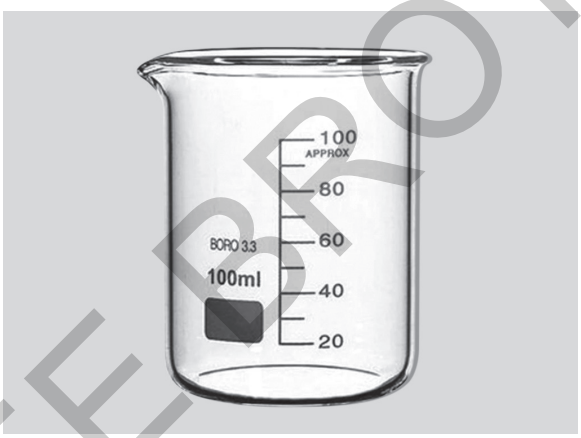

Beaker—a cylindrical container with a flat bottom

Funnel

Funnels can be made from glass, plastic, or metal. Used for transferring liquids or powders, for separating solids from liquids and for separating immiscible liquids.



Funnel

JAYPEE BROTHERS

Graduated Cylinder

To measure the volume of liquids and solids. To measure the volume of a liquid, add the liquid to the cylinder and compare the liquid level to the graduated scale. To measure the volume of a solid, measure the displacement of a liquid when the solid is placed in the water.

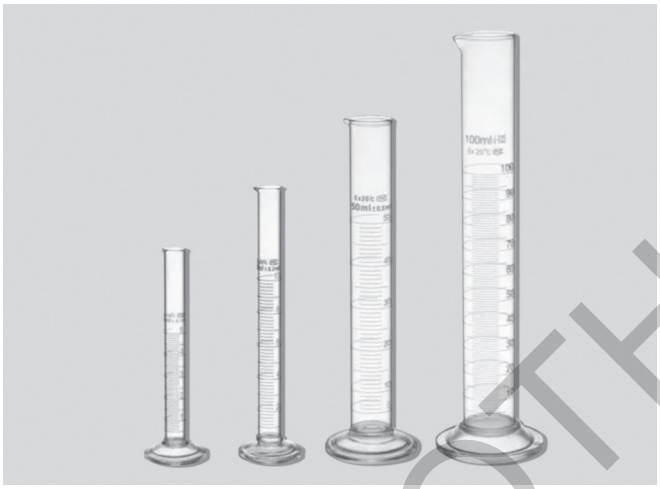

Graduated cylinder

Reagent Bottle

Used to store, handle, and protect chemicals and solutions.



Reagent bottle

Glass Pipette

Used to measure and dispense liquids, such as solvents, solutions, media, reagents, and cell cultures and to collect and dispense serum and plasma.

JAYPEE BROTHERS

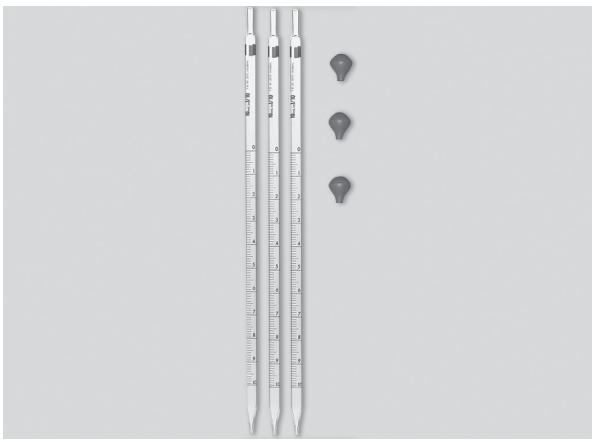

Glass pipette

Urinometer

Used to measure the specific gravity of urine.



Urinometer

Cuvette

A cuvette is a small, clear, rectangular tube used in laboratories to hold samples for spectroscopic analysis.

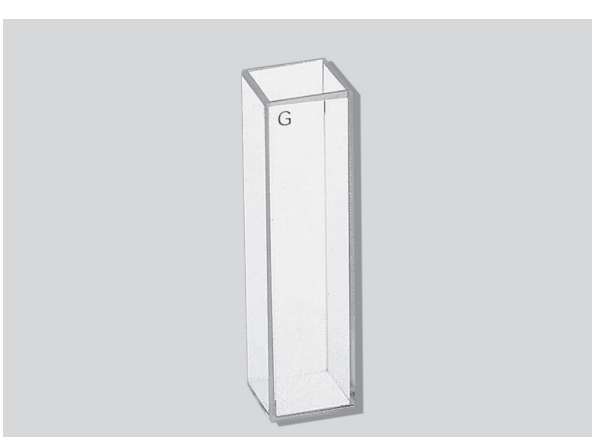

Cuvette

JAYPEE BROTHERS

Folin-Wu Tube

- Folin-Wu is a method for estimation of glucose.
- These special constricted tubes (Folin-Wu tubes) are used to avoid reoxidation of cuprous oxide by atmospheric oxygen.

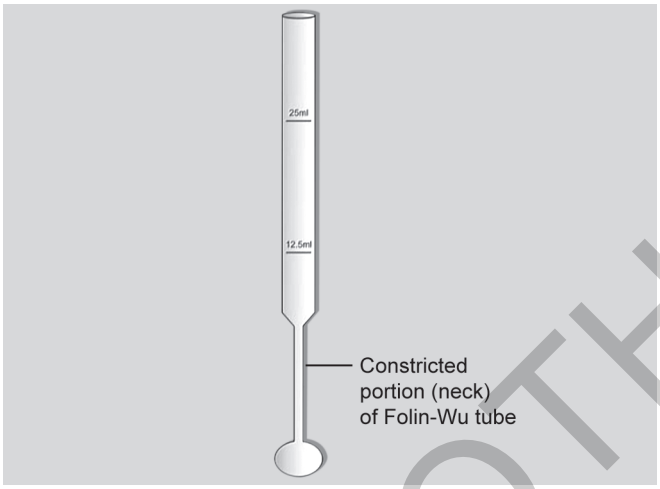

Folin-Wu tube

Laboratory Equipment

Balance

Electronic Balance

Used to accurately weigh chemicals and reagents. Have digital display and calibration mode.



Electronic balance

Analytical Balance

An analytical balance is a type of electronic balance designed for measuring small samples with high precision.

JAYPEE BROTHERS



Analytical balance

Fume Cupboard

Also known as fume hoods or fume cabinets, are used in laboratories to capture and remove hazardous substances from the air.



Fume cupboard

Centrifuge

- Centrifuges are laboratory equipment that separate particles from solutions based on their size, shape, density, and viscosity.
- They are used for separating blood components, cell organelles, separating nucleic acids, proteins and viruses.
- It is based on the sedimentation principle, which states that particles in suspension will settle out of the medium.
- Types of centrifuge: Micro-centrifuge, ultra-centrifuge, and refrigerated centrifuge.

JAYPEE BROTHERS



Centrifuge

Boiling Water Bath

Used to incubate samples at a constant temperature over a long period of time. Water bath is a preferred heat source for heating flammable chemicals instead of an open flame to prevent ignition.



Boiling water bath

Constant Temperature Water Bath

Used to keep samples at a specific temperature for incubation, heating, chemical reactions.

JAYPEE BROTHERS



Constant temperature water bath

Autoclave

A machine that uses steam under pressure to kill harmful bacteria, viruses, fungi, and spores on items that are placed inside a pressure vessel.



Autoclave

Vortex Mixture

Used in many sample preparation processes, such as mixing samples before DNA extraction, or preparing blood samples for testing.

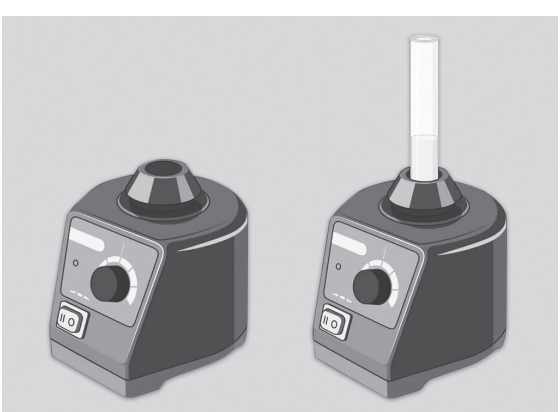

Vortex mixture

JAYPEE BROTHERS

Incubator

Used for biochemical reactions to maintain temperature under controlled conditions.



Incubator

Hot Air Oven

Electrical devices which use dry heat to sterilize.



Hot air oven

Magnetic Stirrer

Used to quickly spin, or stirring or mixing a solution.



Magnetic stirrer

JAYPEE BROTHERS

Wash Bottle

Used to rinse various pieces of laboratory glassware, such as test tubes and round bottom flasks, etc.

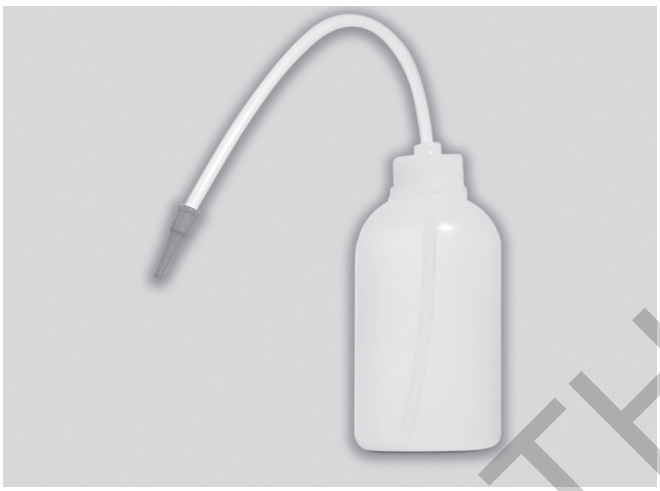

Wash bottle

Flame Photometer

Used in clinical laboratories for determining of sodium, potassium, lithium and calcium ions in body fluids.



Flame photometer

Chromatography Chamber

- Used for separation, identification, and purification of the components of a mixture for qualitative and quantitative analysis.
- Types of chromatography: Paper chromatography, TLC-thin layer chromatography.

JAYPEE BROTHERS

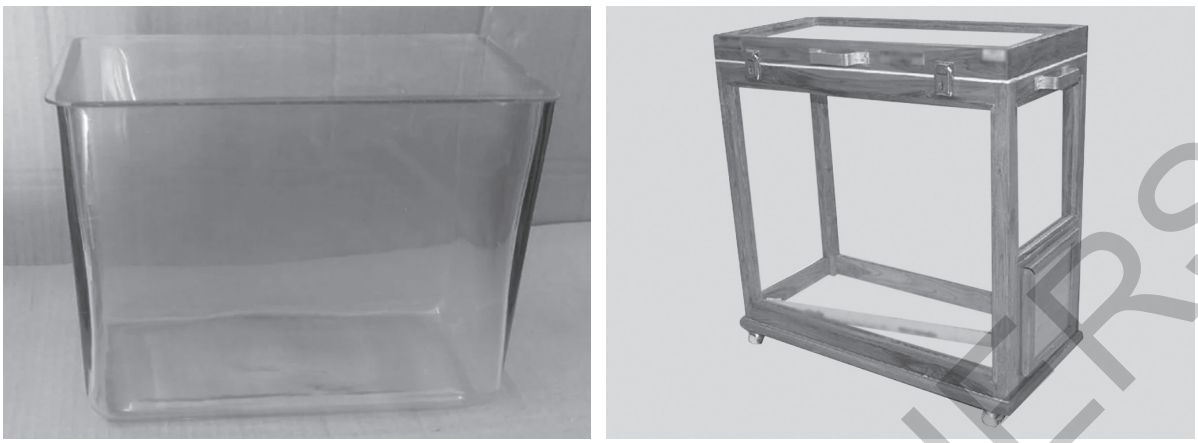

Chromatography chamber

Water Distillation Plant

System that produces purified water by boiling water into vapor, condensing it, and then returning it to a liquid state.

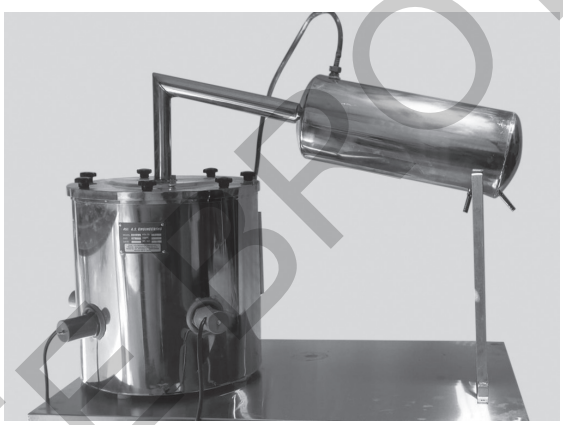

Water distillation plant

Desiccators

A sealed container that controls humidity and protects moisture—sensitive items from dust and moisture in the air.



Desiccator

JAYPEE BROTHERS

Electrophoresis—Horizontal and Vertical

A laboratory instrument that separates and analyzes molecules like DNA, RNA, and proteins by size and charge.

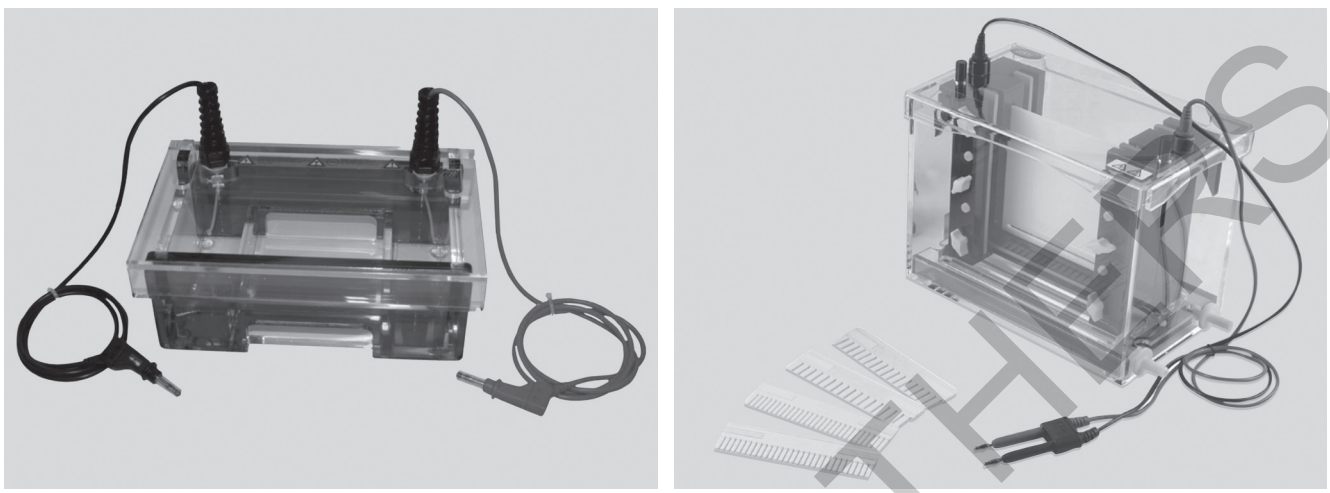

Horizontal electrophoresis; vertical electrophoresis

pH Meter

Used to measure acidity or alkalinity of a solution.



pH meter

Colorimeter

Used for estimating the concentration of biochemical compounds like glucose, proteins, etc., in samples like urine, plasma, and serum.

JAYPEE BROTHERS



Colorimeter

Spectrophotometer

Used to determine the concentration of compounds in a solution by measuring how much light a substance absorbs.



Spectrophotometer

Semi-autoanalyzer

Used to perform routine biochemistry tests, hormonal assays, and drug-enzyme investigations.



Semi-autoanalyzer

JAYPEE BROTHERS

Fully-autoanalyzer

Used to perform routine biochemistry tests, hormonal assays, and drug-enzyme investigations.



Fully-autoanalyzer

Densitometer

A device that uses an optical system to analyze electrophoretic pattern and create a visual diagram of separated bands and provide quantitative information about protein abnormalities.

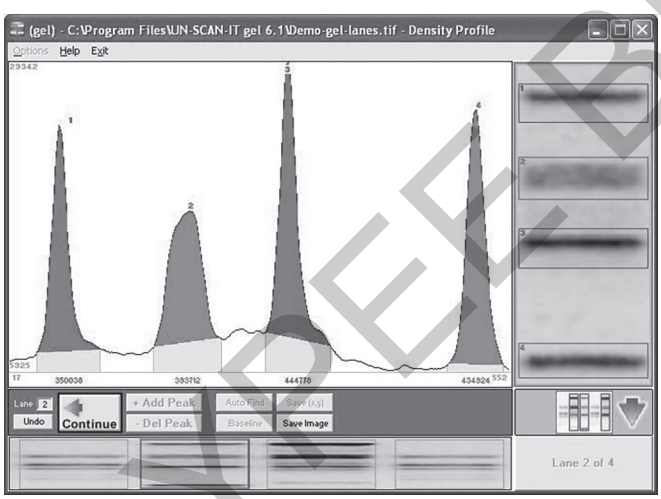



Densitometer

Important Questions

1. Write application of the following glassware/equipment:
   a. Urinometer
   b. Folin-Wu tube
   c. pH meter
   d. Flame photometer
   e. Magnetic stirrer
   f. Chromatography chamber
   g. Centrifuge machine

JAYPEE BROTHERS

for detailed information on biochemistry books, visit our website www.jaypeebrothers.com, for detailed information on biochemistry books, visit our website www.jaypeebrothe

Competency Based Practical Manual for Clinical Biochemistry

MBBS First Professional (Phase I)

Salient Features

- Rational and simple explanation of all competencies for practical topics in biochemistry according to NMC Gazette UGMEB 2024.
- Proving Beer–Lambert law by graph, Levy–Jenning charts, and Westgard rules with graphical representation.
- Types of assessment done in Biochemistry Practical.

Kapila Gaikwad MBBS MD (Biochemistry) is Professor and Head, Department of Biochemistry, Government Medical College, Seoni, Madhya Pradesh, India.

Gajanan Dhokikar MBBS MD (Biochemsistry) is Professor and Head, Department of Biochemistry, Government Medical College, Satna, Madhya Pradesh, India.

Printed in India

Available at all medical bookstores or buy online at www.ejaypee.com

JAYPEE BROTHERS
Medical Publishers (P) Ltd.
EMCA House, 23/23-B, Ansari Road,
Daryaganj, New Delhi - 110 002, INDIA
www.jaypeebrothers.com

Join us on facebook.com/JaypeeMedicalPublishers
Follow us on instagram.com/JaypeeMedicalPublishers

Shelving Recommendation
BIOCHEMISTRY

ISBN 978-93-6616-529-5