n PGMEE books, visit our website **www.jaypeebrothers.com,** for detailed information on PGMEE books

All Sections Reviewed by Subject Specialists

PG Entrance Examination

AIIMS

May 2016

With Explanatory Answers

Includes colored image-based questions

Rituraj Upadhyay

JAYPEE

Contents

Preparation Tips *xi*

1. Anatomy (16 Questions) **1**
2. Physiology (17 Questions) **39**
3. Biochemistry (8 Questions) **62**
4. Pathology (17 Questions) **75**
5. Pharmacology (14 Questions) **104**
6. Microbiology (12 Questions) **120**
7. Forensic Medicine and Toxicology (11 Questions) **150**
8. Orthopedics (6 Questions) **165**
9. Ophthalmology (5 Questions) **177**
10. ENT (5 Questions) **183**
11. Preventive and Social Medicine (17 Questions) **194**
12. Medicine (23 Questions) **216**
13. Surgery (8 Questions) **261**
14. Pediatric (9 Questions) **284**
15. Obstetrics and Gynecology (14 Questions) **300**
16. Dermatology (8 Questions) **326**
17. Anesthesia (5 Questions) **341**
18. Radiology (1 Question) **348**
19. Psychiatry (5 Questions) **350**

34. Which of these are not glucogenic?

a. Oxaloacetate
b. Pyruvate
c. Acetyl-CoA
d. Lactate

Ans. c. Acetyl-CoA *Ref: Harper: Illustrated Biochemistry 30/e p185*

Acetyl-CoA cannot enter gluconeogenic pathway.

Substrates for Gluconeogenesis

- Glucogenic amino acids (all except Leucine and lysine which are purely ketogenic) (**Most important = Alanine**)
- Lactate
- Pyruvate
- Propionate (in ruminants)
- Glycerol
- Fumarate

Location

- Liver (85%)
- Kidney (especially during starvation)
- Small intestine (minimal)

Rate Limiting Step—Fructose-1, 6-bisphosphatase

Irreversible enzymes of gluconeogenesis

Pyruvate carboxylase	In mitochondria	Pyruvate to oxaloacetate	Requires biotin, ATP. Activated by acetyl-CoA
Phosphoenolpyruvate carboxykinase	In cytosol	Oxaloacetate to phosphoenolpyruvate	Requires GTP
Fructose-1 6-bisphosphatase	In cytosol	Fructose-1 6-bisphosphate to fructose-6-phosphate	Citrate Θ, fructose 2, 6-bisphosphate Θ.
Glucose-6- phosphatase	In ER	Glucose-6-phosphate to glucose	

- Occurs primarily in liver; serves to maintain euglycemia during fasting.
- Enzymes also found in kidney, intestinal epithelium.
- Deficiency of the key gluconeogenic enzymes causes hypoglycemia.
- Muscle cannot participate in gluconeogenesis because it lacks glucose-6-phosphatase.

JAYPEE BROTHERS

- Odd-chain fatty acids yield 1 propionyl-CoA during metabolism, which can enter the TCA cycle (as succinyl-CoA), undergo gluconeogenesis, and serve as a glucose source.
- Even-chain fatty acids cannot produce new glucose, since they yield only acetyl-CoA equivalents.

35. A child to emergency with accidental ingestion of Cyanide. It blocks Citric acid cycle by blocking?

a. Acetyl-CoA production b. Aconitase
c. NAD+ d. Citrate

Ans. c. NAD+ *Ref: Harper: Illustrated Biochemistry 30/e p132*

Cyanide blocks Complex IV (Cytochrome c reductase) of Electron transport Chain. It has no direct effect on any component of Citric acid cycle.

If the electron transport chain is blocked, then the electron carriers NADH and $FADH_2$ cannot unload their electrons into it, which means NAD+ and FAD are not regenerated. Since Glycolysis and the Krebs cycle both require NAD+ (and the Krebs cycle requires FAD), NAD+ will get depleted as NADH level is raised both of these processes will stop running.

We can see from the two cycles below that they are linked by NAD+ and NADH, and hence blocking of ETC by cyanide will block the Citric acid cycle as well, via NAD+.

Electron transport chain

- Electrons flow through the respiratory chain through a redox span of 1.1 V from NAD+/NADH to $O_2/2H_2O$.
- Passing through three large protein complexes:
- **NADH-Q oxidoreductase (Complex I),** where electrons are transferred from NADH to **coenzyme Q (Q)** (also called **ubiquinone**) .
- **Q-cytochrome *c* oxidoreductase (Complex III),** which passes the electrons on to **cytochrome *c*;**
- **Cytochrome *c* oxidase (Complex IV),** which completes the chain, passing the electrons to O_2 and causing it to be reduced to H_2O.
- Some substrates with more positive redox potentials than NAD+/NADH (e.g. succinate) pass electrons to Q via a fourth complex, **succinate-Q reductase (Complex II),** rather than Complex I.
- The four complexes are embedded in the inner mitochondrial membrane, but Q and cytochrome *c* are mobile.
- Q diffuses rapidly within the membrane, while cytochrome *c* is a soluble protein.

JAYPEE BROTHERS

- The flow of electrons through Complexes I, III, and IV results in the pumping of protons from the matrix across the inner mitochondrial membrane into the intermembrane space.

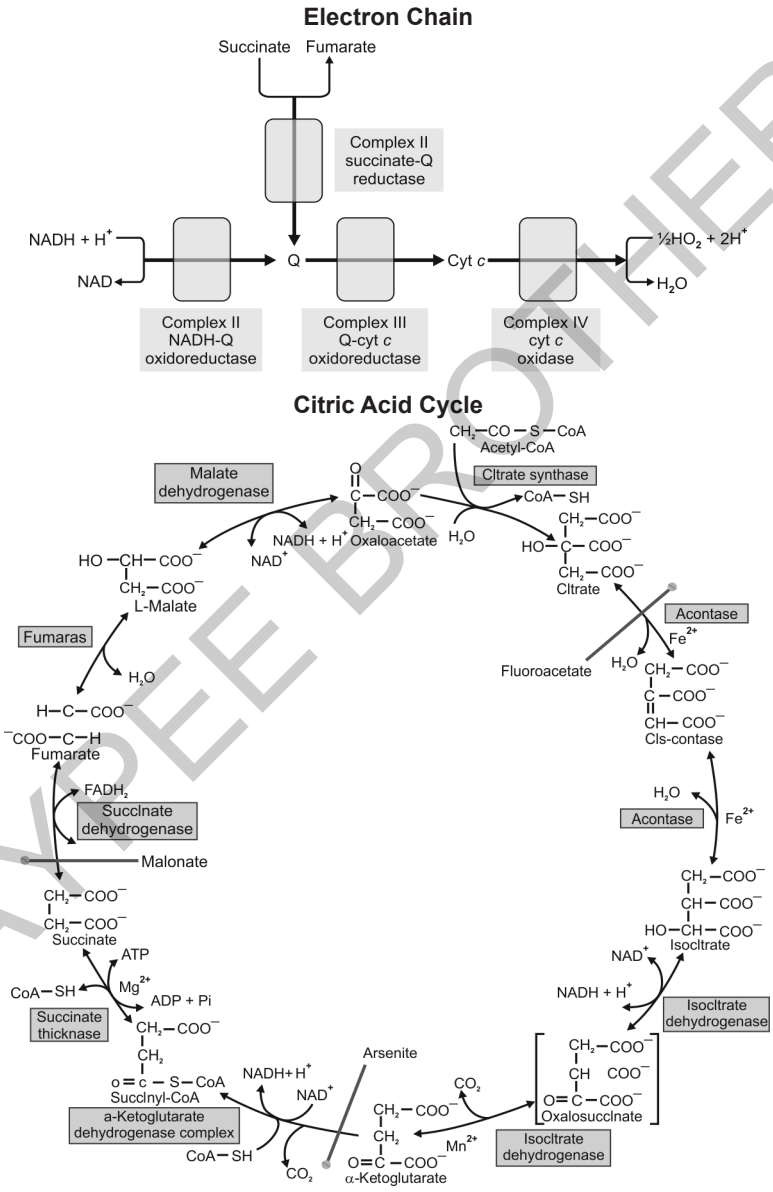

JAYPEE BROTHERS

ETC inhibitors

Inhibitors of the respiratory chain

- **Barbiturates** such as amobarbital inhibit electron transport via Complex I by blocking the transfer from Fe-S to Q.
- **Antimycin A** and **dimercaprol** inhibit the respiratory chain at Complex III.
- The classic poisons **H2S, carbon monoxide,** and **cyanide** inhibit Complex IV and can therefore totally arrest respiration.
- **Malonate** is a competitive inhibitor of Complex II.

Inhibitors of oxidative phosphorylation

- **Atractyloside** inhibits oxidative phosphorylation by inhibiting the transporter of ADP into and ATP out of the mitochondrion.
- The antibiotic **oligomycin** completely blocks oxidation and phosphorylation by blocking the flow of protons through ATP synthase.

Uncouplers of oxidative phosphorylation

- **Uncouplers** dissociate oxidation in the respiratory chain from phosphorylation. Cause respiration to become uncontrolled, since the rate is no longer limited by the concentration of ADP or Pi.
- The uncoupler that has been used most frequently is **2,4-dinitrophenol,** but other compounds act in a similar manner.
- **Thermogenin (or the uncoupling protein)** is a physiological uncoupler found in brown adipose tissue that functions to generate body heat, particularly for the newborn and during hibernation in animals.

36. Which type of lipase is controlled by Glucagon?

a. Hormone sensitive lipase
b. Lipoprotein Lipase
c. Gastric lipase
d. Pancreatic lipase

Ans. a. Hormone Sensitive Lipase

Ref: Harper: Illustrated Biochemistry 30/e p262

Hormone sensitive lipase, the enzyme which mobilizes fatty acids from triacylglycerol stores in adipose tissue is inhibited by Postaglandin-E while **Glucagon, ACTH, epinephrine and vasopressin promote activation of the enzyme.**

This lipase is distinct from **lipoprotein lipase**, which catalyzes lipoprotein triacylglycerol hydrolysis before its uptake into extrahepatic tissues.

Hormone-sensitive lipase (cholesteryl ester hydrolase)

- HSL is an intracellular neutral lipase that is capable of hydrolyzing a variety of esters. The enzyme has a long and a short form.
- The long form is expressed in steroidogenic tissues such as testis, where it converts cholesteryl esters to free cholesterol for steroid hormone production.

JAYPEE BROTHERS

- The short form is expressed in adipose tissue, among others, where it hydrolyzes stored triglycerides to free fatty acids.

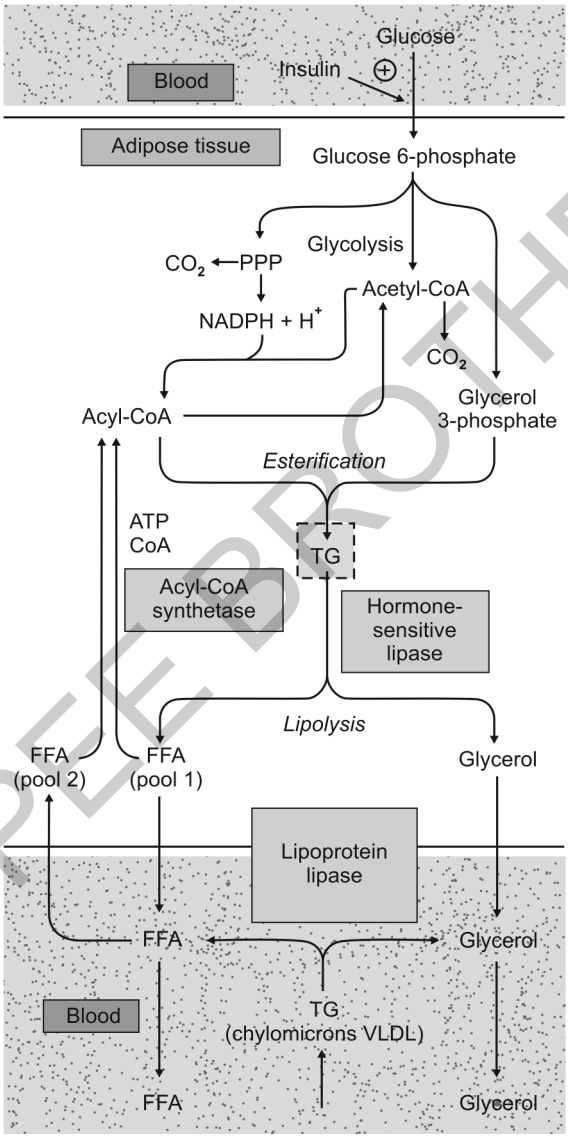

- During fasting-state the increased free fatty acid secretion by adipocyte cells was attributed to adrenaline hormone. Hence the name "hormone-sensitive lipase".

JAYPEE BROTHERS

- The main function of hormone-sensitive lipase is to mobilize the stored fats.
- HSL is activated when the body needs to mobilize energy stores, and so responds positively to catecholamines, ACTH. It is inhibited by insulin.
- **H**ormones accelerate the release of FFA from adipose tissue and raise the plasma-free fatty acid concentration by increasing the rate of lipolysis of the triacylglycerol stores. These include **epinephrine, norepinephrine, glucagon, adrenocorticotropic hormone (ACTH), and a-melanocyte-stimulating hormones (MSH), thyroid-stimulating hormone (TSH), growth hormone (GH), and vasopressin.**
- Many of these activate hormone-sensitive lipase. For an optimal effect, most of these lipolytic processes require the presence of glucocorticoids and thyroid hormones.
- These hormones act in a facilitatory or permissive capacity with respect to other lipolytic endocrine factors.

37. In the mammalian genome, maximum number of genes code for the receptors of:

a. Growth factors
b. Immunoglobulin receptors
c. Interleukins
d. Odorants

Ans. d. Odorants *Ref: http://hmg.oxfordjournals.org/content/11/10/1153.full*

The olfactory receptor (OR) genes constitute the largest gene family in mammalian genomes. Humans have >1,000 OR genes, of which only ~40% have an intact coding region and are therefore putatively functional.

Odorant receptor genes form the largest gene family in the genome of many animals: for example, the mouse genome contains approximately 1200 of these genes. These genes are distributed across 40 gene clusters in the mouse genome, and clusters contain varying numbers of receptor genes.

Immunoglobulin receptors are coded by only 3 genes which undergoes V,D,J recombinations to form large number of receptors.

Some features of human genome

- Total 20,000–25,000 human protein-coding gene
- Total number of base pairs in haploid set of chromosome of the human genome is 3 billion base pairs
- Coding DNA <2%
- Noncoding DNA 98%

JAYPEE BROTHERS

- Some noncoding DNA contains genes for RNA molecules with important biological functions (noncoding RNA, for example ribosomal RNA and transfer RNA)
- Protein-coding sequences (coding exons) constitute less than 1.5% of the human genome.
- Dystrophin (DMD) is the largest protein-coding gene in the human reference genome,
- Titin (TTN) has the longest coding sequence, the largest number of exons and the longest single exon.

38. Second messenger for smooth muscle relaxation mediated by NO is:

a. cGMP
b. cAMP
c. Ca2+
d. Magnesium

Ans. a. cGMP *Ref: Harper: Illustrated Biochemistry 30/e p660*

cGMP is the second messenger for NO.

Nitric oxide (NO)

- Vasodilators such as acetylcholine initially interact with the endothelial cells of small blood vessels via receptors.
- The receptors are coupled to the phosphoinositide cycle, leading to the intracellular release of Ca2+ through the action of inositol trisphosphate.
- In turn, the elevation of Ca2+ leads to the liberation of **endothelium derived relaxing factor (EDRF),** which diffuses into the adjacent smooth muscle.
- There, it reacts with the heme moiety of a soluble guanylyl cyclase, resulting in activation of the latter, with a consequent elevation of intracellular levels of **cGMP** .
- This in turn stimulates the activities of certain cGMP-dependent protein kinases, which probably phosphorylate specific muscle proteins, causing relaxation.
- The important coronary artery vasodilator **nitroglycerin,** widely used to relieve angina pectoris, acts to increase intracellular release of EDRF and thus of cGMP.
- Quite unexpectedly, EDRF was found to be the gas **NO.**
- NO is formed by the action of the enzyme NO synthase, which is cytosolic.
- The endothelial and neuronal forms of NO synthase are activated by Ca2+.
- The substrate is **arginine,** and the products are citrulline and NO.

JAYPEE BROTHERS

Some Messenger and second Messenger Systems

	cAMP System	Phosphoinositol system	Arachidonic acid system	cGMP System	Tyrosine kinase system
First Messenger: Neurotransmitters (Receptor)	Epinephrine (α2, β1, β2) Acetylcholine (M2)	Epinephrine (α1) Acetylcholine (M1, M3)	Histamine (Histamine receptor)	-	-
First Messenger: Hormones	ACTH, ANP, CRH, CT, FSH, Glucagon, hCG, LH,MSH, PTH, TSH	AGT, GnRH, GHRH,Oxytocin, TRH	-	ANP, Nitric oxide	INS, IGF, PDGF
Signal Transducer	GPCR/Gs (β1, β2), Gi (α2, M2)	GPCR/G_q	Unknown G-protein	-	RTK
Primary effector	Adenylyl cyclase	Phospholipase C	Phospholipase A	guanylate cyclase	RasGEF (Grb2-Sos)
Second messenger	cAMP (cyclic adenosine monophosphate)	IP3; DAG; Ca2+	Arachidonic acid	cGMP	Ras.GTP (Small G Protein)
Secondary effector	protein kinase A	PKC; CaM	5-Lipoxygenase, 12-Lipoxygenase, cycloxygenase	protein kinase G	MAP3K (c-Raf)

39. Precipitation of proteins is done by all these except:

a. Salts of heavy metals
b. Adding trichloroacetic acid
c. Adding acetyl alcohol and acetone
d. Adjusting pH to other then the isoelectric point

Ans. d. Adjusting pH to other then the isoelectric point

Ref: Harper: Illustrated Biochemistry 30/e p26

Protein precipitation is widely used to concentrate proteins and *purify* them from various contaminants.

Protein precipitation occurs at the isoelectric point of the protein and not any other pH. All the other methods are known to cause Protein precipitation.

Methods of protein precipitation

Selective precipitation exploits differences in relative solubility of individual proteins:

JAYPEE BROTHERS

- pH (isoelectric precipitation), (protein is least soluble at isoelectric point).
- Polarity (precipitation with ethanol or acetone), or
- Salt concentration (salting out with ammonium sulfate). (Half saturation—globulin, casein) (Full saturation = albumin).
- By heavy metals (lead, cadmium, mercury) Chromatographic techniques separate one protein from another based upon difference in their:
- Size (size exclusion chromatography)
- Charge (ion-exchange chromatography)
- Hydrophobicity (hydrophobic interaction chromatography) or
- Ability to bind a specific ligand (affinity chromatography).

Isoelectric precipitation

- Proteins are less soluble at their isoelectric point where they have zero net charge and can most easily approach each other with minimal charge repulsion. Since proteins are also less soluble at very low ionic strength, isoelectric precipitation is usually done at very low or no salt.
- The *isoelectric point* (pI) is the pH of a solution at which the net primary charge of a protein becomes zero.
- At a solution, pH that is above the pI, the surface of the protein is predominantly negatively charged and therefore like- charged molecules will exhibit repulsive forces. Likewise, at a solution pH that is below the pI, the surface of the protein is predominantly positively charged and repulsion between proteins occur. However, at the pI the negative and positive charges cancel, repulsive electrostatic forces are reduced and the attraction forces predominate. The attraction forces will cause aggregation and precipitation.
- The pI of most proteins is in the pH range of 4–6.
- Mineral acids, such as *hydrochloric* and *sulfuric acid* are used as precipitants.
- The greatest disadvantage to isoelectric point precipitation is the irreversible *denaturation* caused by the mineral acids. For this reason isoelectric point precipitation is most often used to precipitate contaminant proteins, rather than the target protein.

40. Which of these amino acids does not enter the Krebs cycle by forming Acetyl-CoA via pyruvate?

a. Tyrosine
b. Hydroxyproline
c. Glycine
d. Alanine

Ans. a. Tyrosine *Ref: Harper: Illustrated Biochemistry 30/e p165*

Tyrosine enters Krebs cycle via Fumarate, while all others form pyruvate to enter the Krebs cycle.

JAYPEE BROTHERS

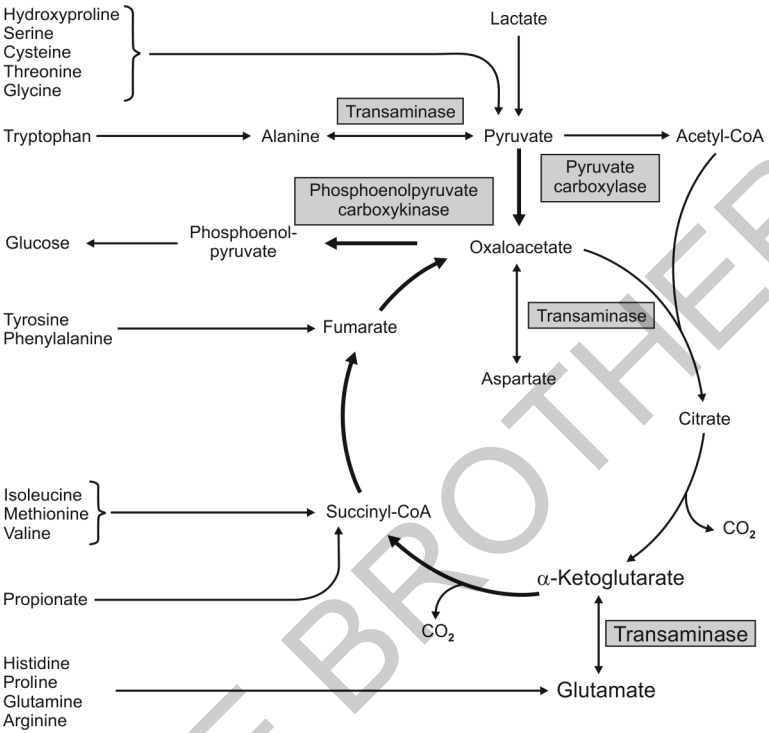

Aminotransferase (transaminase) reactions form pyruvate from alanine, oxaloacetate from aspartate, and α-ketoglutarate from glutamate.

Because these reactions are reversible, the cycle also serves as a source of carbon skeletons for the synthesis of these amino acids.

Other amino acids contribute to gluconeogenesis because their carbon skeletons give rise to citric acid cycle intermediates:--

- Alanine, cysteine, glycine, hydroxyproline, serine, threonine, and tryptophan yield pyruvate;
- Arginine, histidine, glutamine, and proline yield α-ketoglutarate;
- Isoleucine, methionine, and valine yield succinyl-CoA;
- Tyrosine and phenylalanine yield fumarate.

41. About the following Michaelis-Menten curve, true statement is:

a. Allosteric modifier binds in a concentration dependent manner
b. Modifier can affect the catalytic site by binding to the allosteric site.
c. Adding more substrate to the enzyme can displace the allosteric modifier
d. Allosteric modifiers changes the binding constant of the enzyme but not the velocity of reaction

JAYPEE BROTHERS

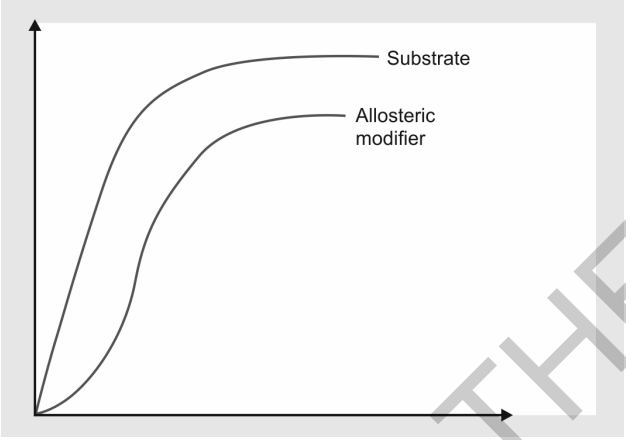

Ans. b. Modifier can affect the catalytic site by binding to the allosteric site. *Ref: Harper: Illustrated Biochemistry 30/e p 82,91*

In allosteric modification, The modifier binds to the allosteric site and changes the rate of enzymatic action at the catalytic site. Since it is not a type of competitive inhibition, the modifier does not bind in a concentration dependent manner and adding substrate doesn't overcome the inhibitory effect. As we can see from the graph, allosteric inhibition usually decreases the velocity of the reaction without any change in Km.

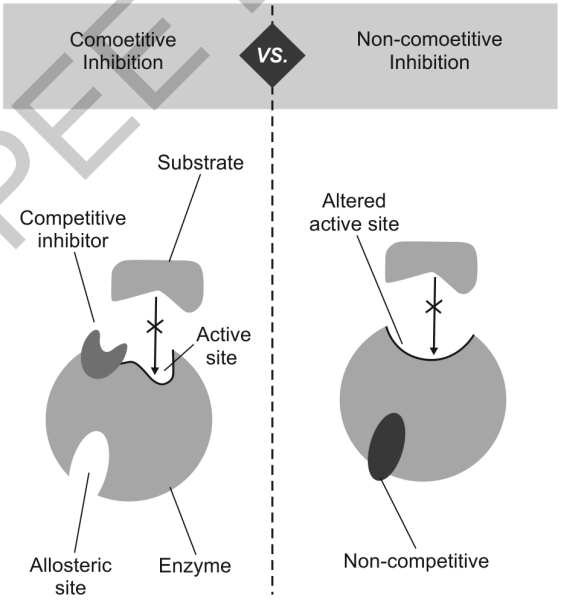

JAYPEE BROTHERS

Inhibitor type	Binding site on enzyme	Kinetic effect
Competitive inhibitor	Specifically at the catalytic site, where it competes with substrate for binding in a dynamic equilibrium - like process. Inhibition cannot be reversed by substrate.	V_{max} is unchanged; Km, defined by [S] required for 1/2 maximal activity, is increased.
Noncompetitive inhibitor	Binds E or ES complex other that at the catalytic site. Substrate binding unaltered, but ESI complex cannot be reversed by substrate.	Km appears unaltered; V_{max} is decreased proportionately to inhibitor concentration.
Uncompetitive inhibitor	Binds only to ES complexes at locations other than the catalytic site. Substrate binding modifies enzyme structure, making inhibitor binding site available. Inhibition cannot be reversed by substrate.	Apparent V_{max} decreased; Km, as defined by [S] required for 1/2 maximal activity, is decreased.

The hallmark of all the reversible inhibitors is that when the inhibitor concentration drops, enzyme activity is regenerated. Usually these inhibitors bind to enzymes by non-covalent forces and the inhibitor maintains a reversible equilibrium with the enzyme

Allosteric inhibition

- **Allosteric enzymes are those for which catalysis at the active site may be modulated by the presence of effectors at an allosteric site.**
- Generally, the inhibitor binds at an **allosteric site,** one spatially distinct from the catalytic site of the target enzyme.
- Feedback inhibitors thus typically bear little or no structural similarity to the substrates of the enzymes they inhibit.
- The kinetics of feedback inhibition may be competitive, noncompetitive, partially competitive, or mixed.
- In general, binding of an allosteric regulator influences catalysis by inducing a conformational change that encompasses the active site.

Allosteric effects may be on Km or on V_{max}

Two classes of allosterically regulated enzymes: K-series and V-series enzymes.

- For K-series allosteric enzymes, the substrate saturation kinetics is competitive in the sense that Km is raised without an effect on V_{max}.
- For V-series allosteric enzymes, the allosteric inhibitor lowers V_{max} without affecting the Km. Alterations in Km or Vmax often are the

JAYPEE BROTHERS

product of conformational changes at the catalytic site induced by binding of the allosteric effector at its site.

- For a K-series allosteric enzyme, this conformational change may weaken the bonds between substrate and substrate-binding residues.
- For a V-series allosteric enzyme, the primary effect may be to alter the orientation or charge of catalytic residues, lowering V_{max}.

JAYPEE BROTHERS

for detailed information on PGMEE books, visit our website **www.jaypeebrothers.com,** for detailed info

AIIMS May 2016

With Explanatory Answers

Key Features

- All sections reviewed by subject specialists
- Includes colored Image-based questions
- A section entailing how to study for PG entrance examinations
- Tips to tackle difficult questions from toppers of the exam
- All genuine questions
- Authentic answers with clear references from various latest standard textbooks
- Explicit explanation of each question incorporating high-yielding facts
- Only relevant information about each topic
- Includes useful tables and figures
- Highlights the likely source of errors by the candidates.



Rituraj Upadhyay MBBS is a graduate from All India Institute of Medical Sciences, New Delhi and is currently doing MD in Radiation Oncology from the same place. He started with his endeavor of helping PG aspirants by writing up a book on AIIMS November 2014 paper with the sole aim of coming up with a timely book containing authentic questions and genuine explanations. This is the fourth book of the series. It is really important for students to be thorough with the recently asked questions in the exams. Hope this book meets the requirements like the previous ones. All the best!!

Available at all medical bookstores
or buy online at www.jaypeebrothers.com



JAYPEE BROTHERS
Medical Publishers (P) Ltd.
www.jaypeebrothers.com
Join us on facebook.com/JaypeeMedicalPublishers


ISBN 978-93-85999-06-2